DION
MACHINERIES

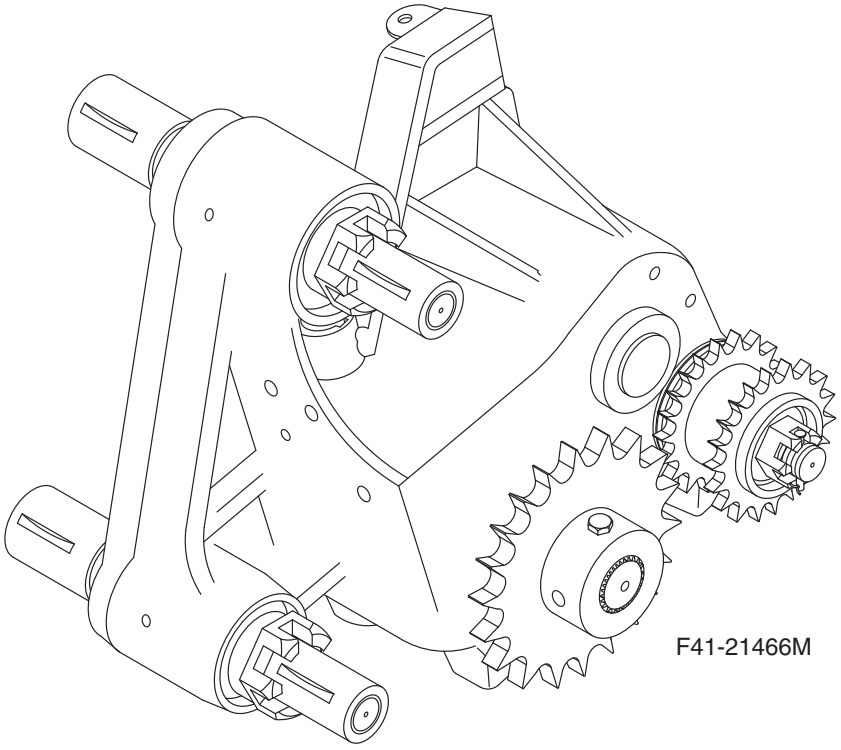

Main Transmission
Technician's manual

Transmission principale
Manuel du technicien

This manual also gives instructions on how to assemble the sprockets, the sheave and the radial pin clutch on the transmission. However, these parts are not included in assembly F41-21466M at the parts department.

Ce manuel explique également l'assemblage des roues à chaîne, de la poulie et du limitateur à cames en étoile sur la transmission mais qui ne sont pas inclus dans l'assemblée F41-21466M au département des pièces.

Manual no. / Manuel no. F41-03-T-880

1

Install the two bearing cups #F4121407P (items 1) as shown here. The thin edge of the cup must face up. Use a hammer (figure 1-a) to force each cup well inside its hole. Also, install the cup #04367 (item 1A) making sure the thin edge of the cup is facing down (or the inside of housing). The cup is in the correct position when the outside edge is flush with the housing surface.

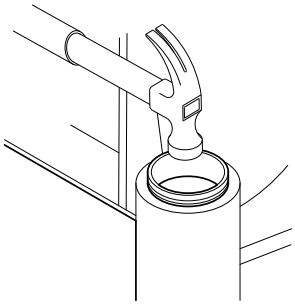

Figure 1-a

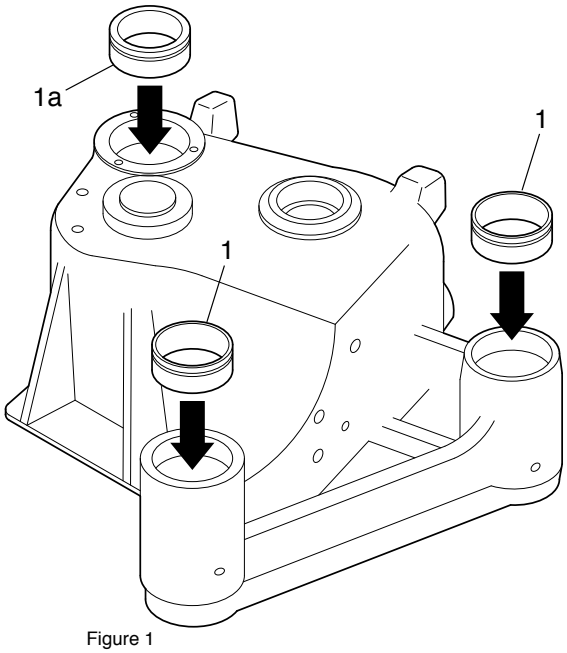

Figure 1

2

Use a tool (item 2) whose diameter fits the outside diameter of the bearing in order to sink the bearing to the bottom. This must only be done to items 3 and 4.

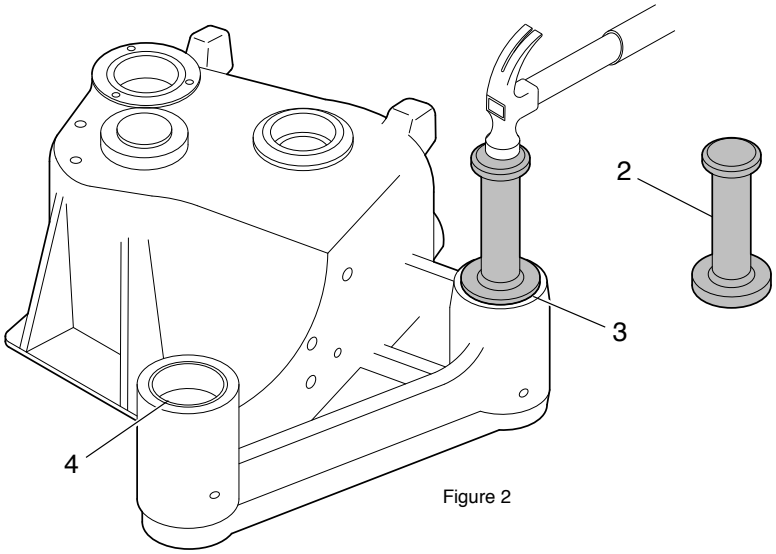

Figure 2

3

Apply grease inside the bearing seats (items 3 and 4). Use a brush and do not apply too much grease. The grease will allow the bearings to slide freely inside the seats.

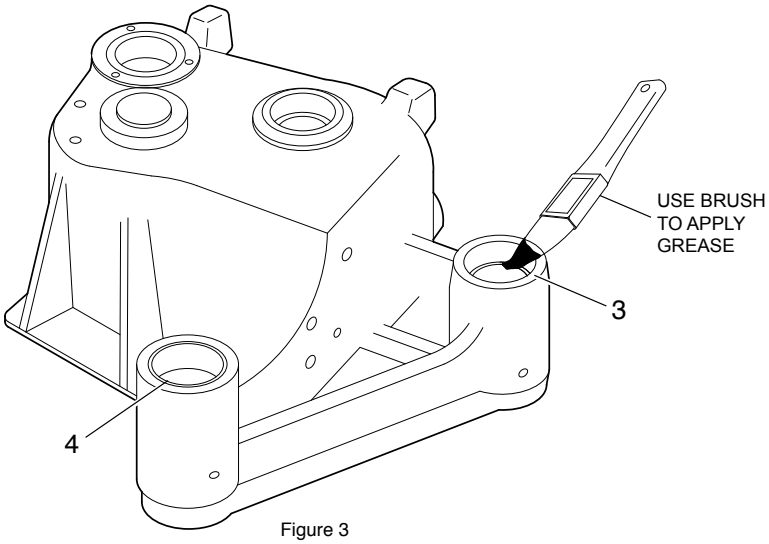

Figure 3

4

Install the tapered roller bearings #F4121407P (items 5) inside the bearing seats. Rotate the bearing inside the seat in order to spread the grease evenly. Install a seal (2 places) #F4121410P (items 6) as shown in figure 4.

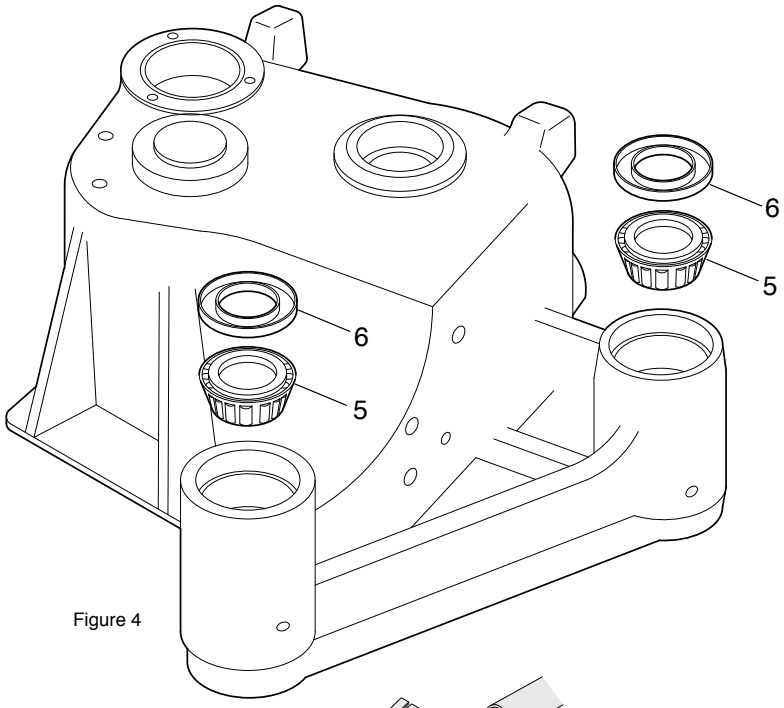

Figure 4

5

Use a tool (item 7) whose diameter fits the outside diameter of the seal (item 6 in figure 4) in order to sink the seal to the bottom. The seal is well installed when the bearing can be rotated with some small resistance.

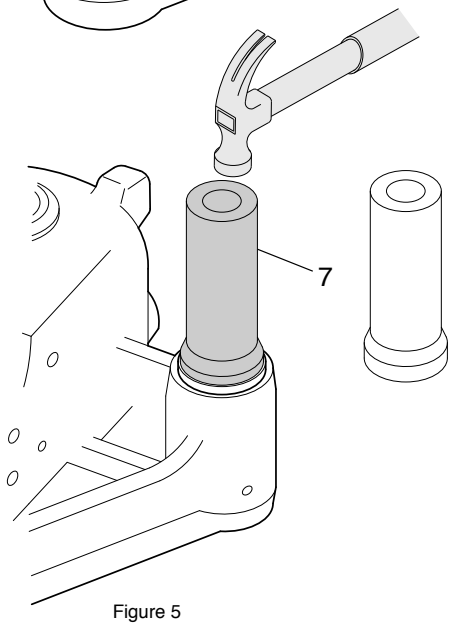

Figure 5

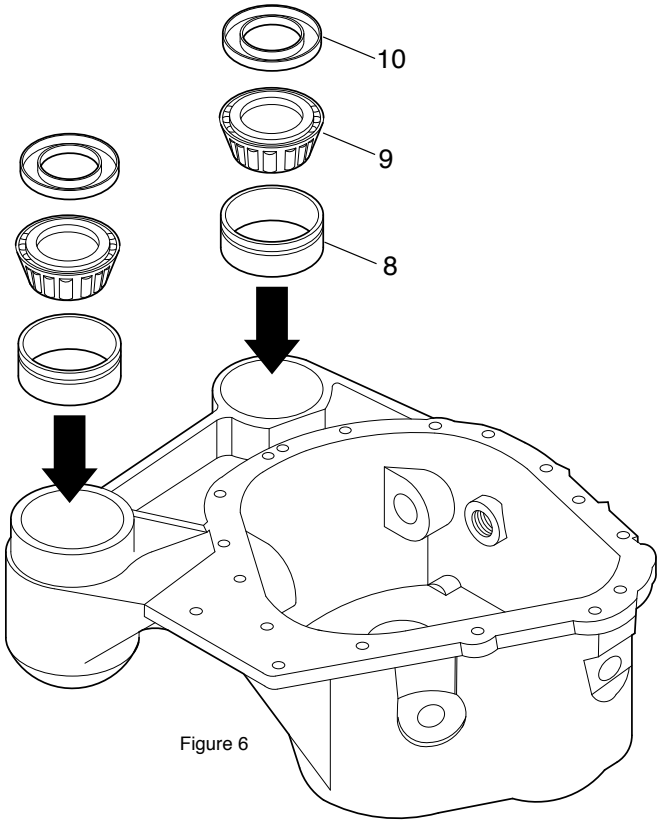

Figure 6

6

Turn over the housing and repeat the same steps.
Install the cup (items 8) making sure the thin edge faces down.
Install the bearings #F4121407P (items 9) and the seals #F4121410P (items 10). The seals must be installed up side down as shown in figure 6.
Use a special tool to get the cups inside (see step 2) and apply some grease before inserting the bearings (step 3).

7

Check if the two plugs (item 11 #F4116883) and (item 11-a #F4112151) can easily be screwed inside the housing. If this is not the case, the two holes will have to be rethreaded in order to clean up the existing threads.

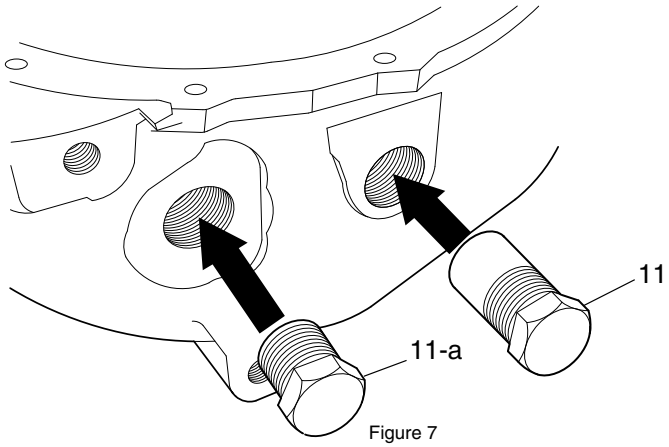

Figure 7

8

Apply a trickle of Lock-tite to the base of the bearings (items 12 and 13). As the bearing penetrates the seat, the Lock-tite will spread upward covering the whole bearing.

9

Insert both bearings (item 12 #T2915217P) and (item 13 #T2915218P) in their appropriate seat. Use a hammer and a special tool, with a diameter equal or slightly less the outside diameter of the bearing, in order to insure that the bearing is inserted properly. The bearing is in the correct position when the noises changes as it touches the shoulder at the bottom.

10

Insert the inside rings (items 12a and 13a) in their appropriate bearing, as shown in figure 8.

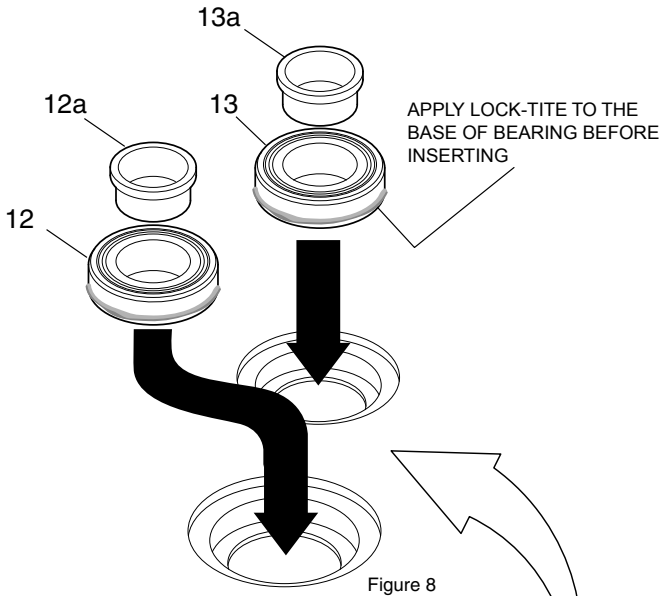

Figure 8

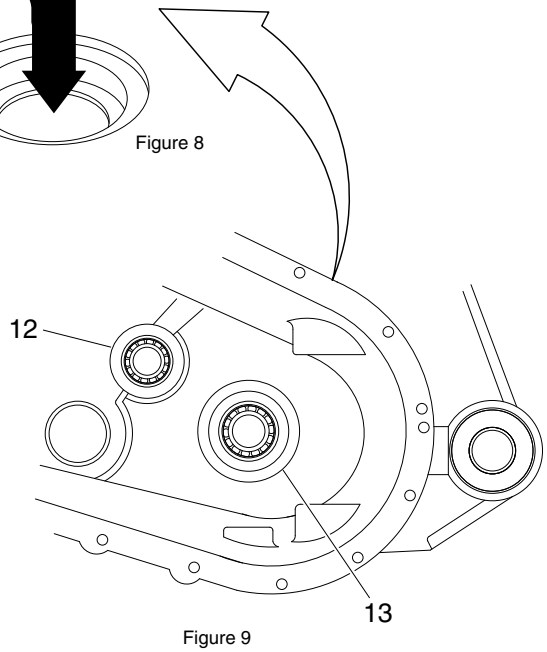

Figure 9

11

Insert the two spring pins #T2915222P (items 14 and 15) in the direction fork #F4116999 (item 16).
If necessary, after the clutch jaw has been adjusted, grind the outside part of the pin (item 15) exceeding the fork. See figure 10-b.

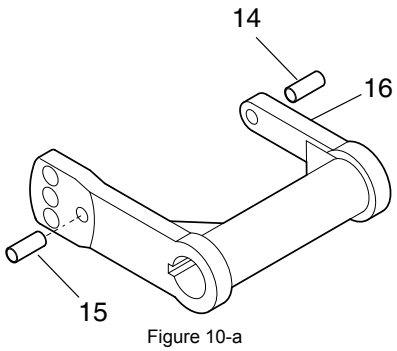

Figure 10-a

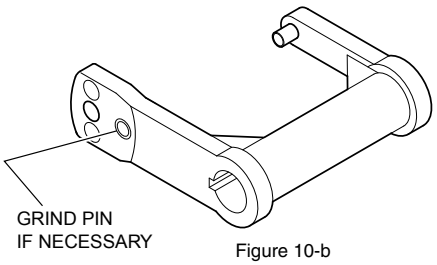

Figure 10-b

12

Slide an o-ring #F4117223P (item 17) on the second groove of the direction shaft #F4116780 (item 18). Be careful not to damage the o-ring. Slide it slowly on the shaft (item 18).

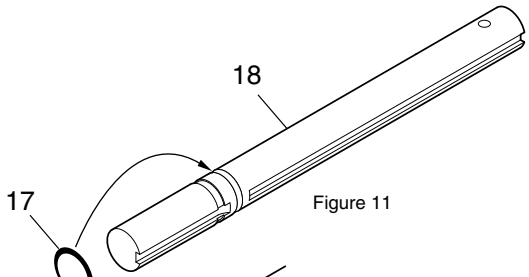

Figure 11

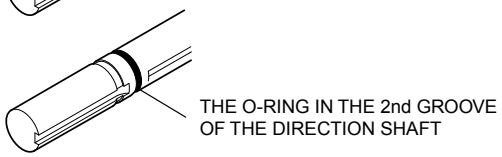

13

Insert the direction fork (item 16) inside the housing as shown in figure 12. Then, slide the shaft (item 18) inside the housing and through the fork.
Insert a spacer #F4116950 (item 19) between the direction fork and the housing and make sure the shaft goes through the spacer.

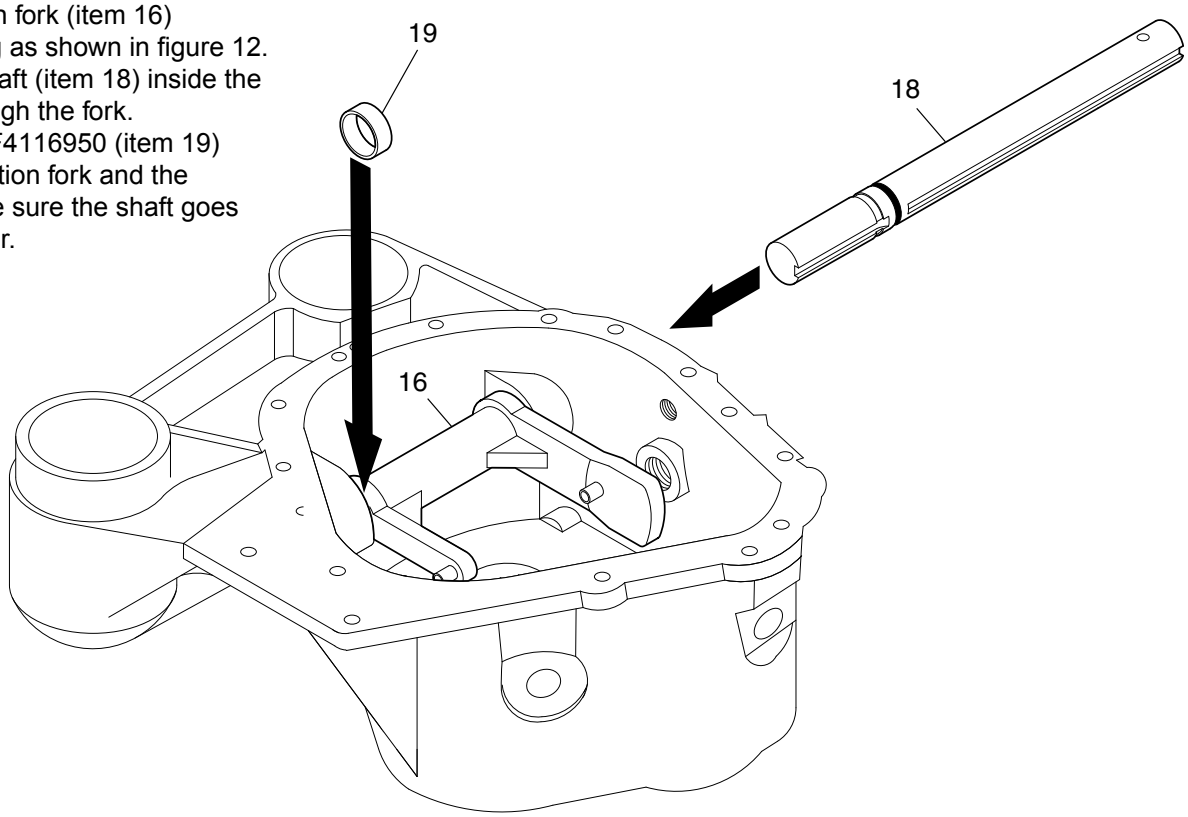

Figure 12

14

Insert the key #4017 (item 20) in the key way of the direction shaft.

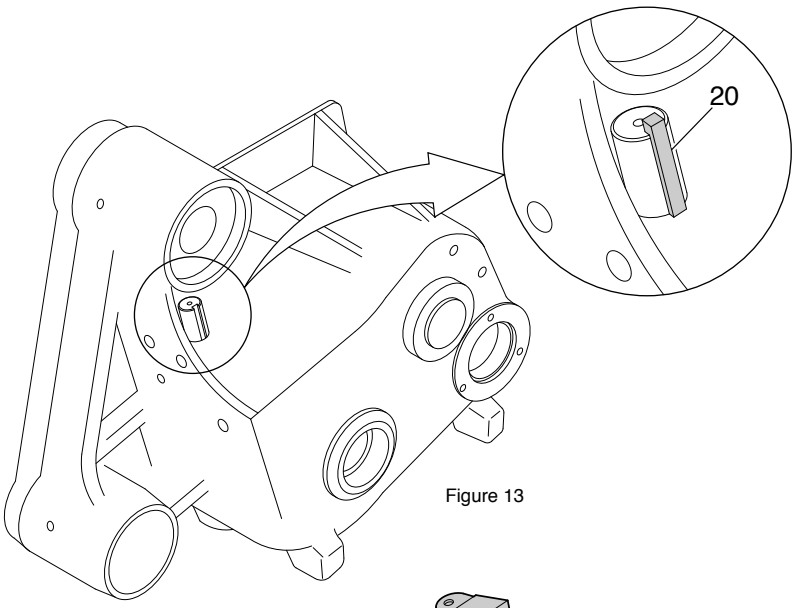

Figure 13

15

Apply anti-seize inside the direction arm (item 21).

16

Insert the direction arm #F4116770W (Item 21) on shaft as shown in figure 14.

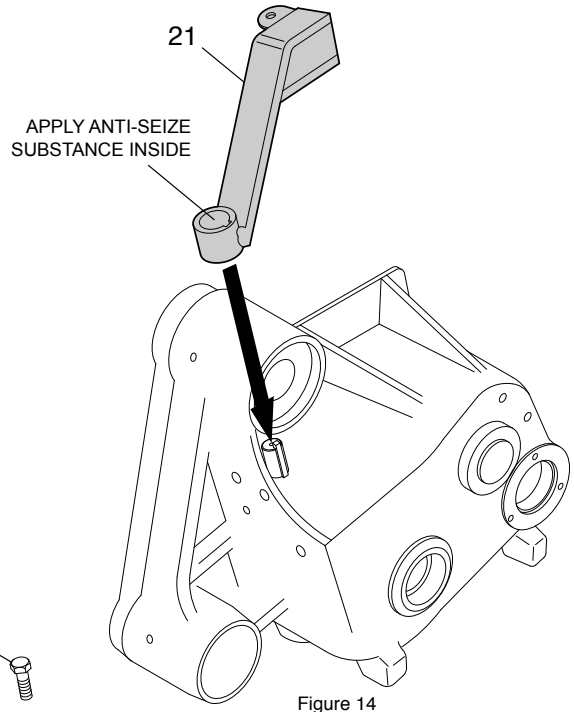

Figure 14

17

Secure the direction arm (item 21) to the shaft using a flat washer F4120873 (item 22), a lock washer (item 23) and a bolt (item 24) as shown in figure 15. DO NOT tighten at this moment.

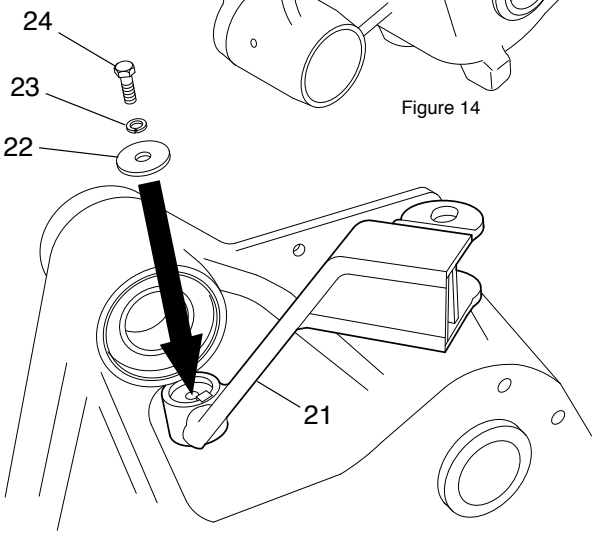

Figure 15

18

Insert the key #F4120917 (item 25) into the key way at the end of the direction shaft, as shown in figure 16. Use a screwdriver to push the key inside (item 25). The key must be flush with the fork (see item 25 in figure 20)

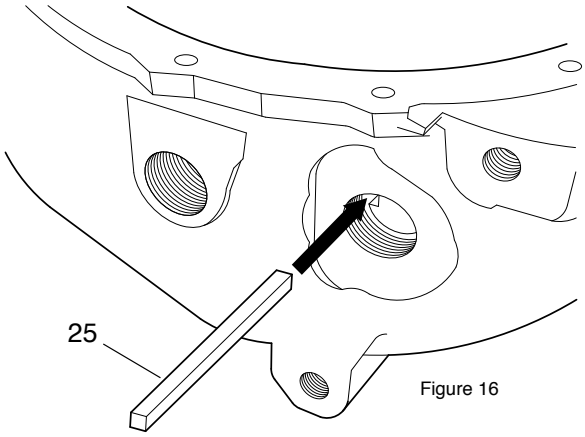

Figure 16

19

Insert the special washer #F4116949 (item 26) at the end of the direction shaft, as shown in figure 17. Then, insert the spring pin (item 27) in the hole of the direction shaft, between the housing and the fork, as shown in figure 18. The pin must stick out equally on both sides of the shaft.

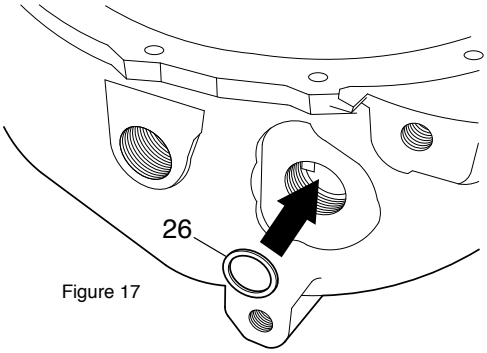

Figure 17

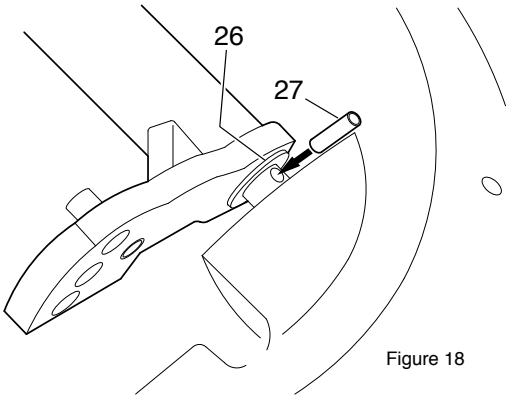

Figure 18

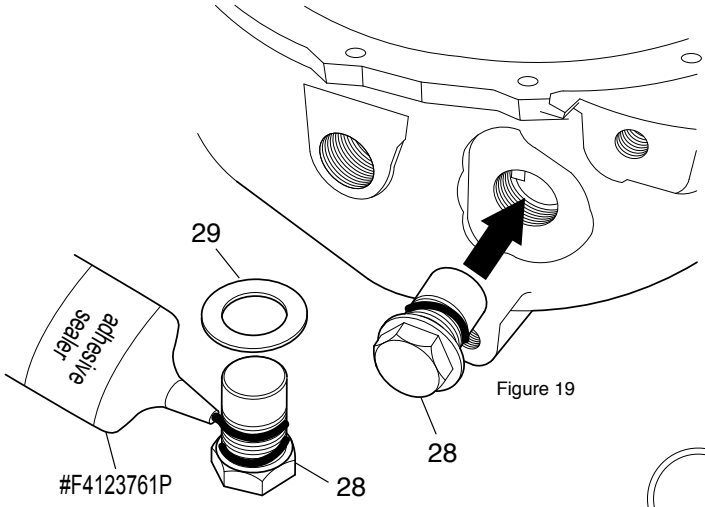

Figure 19-a

Figure 19

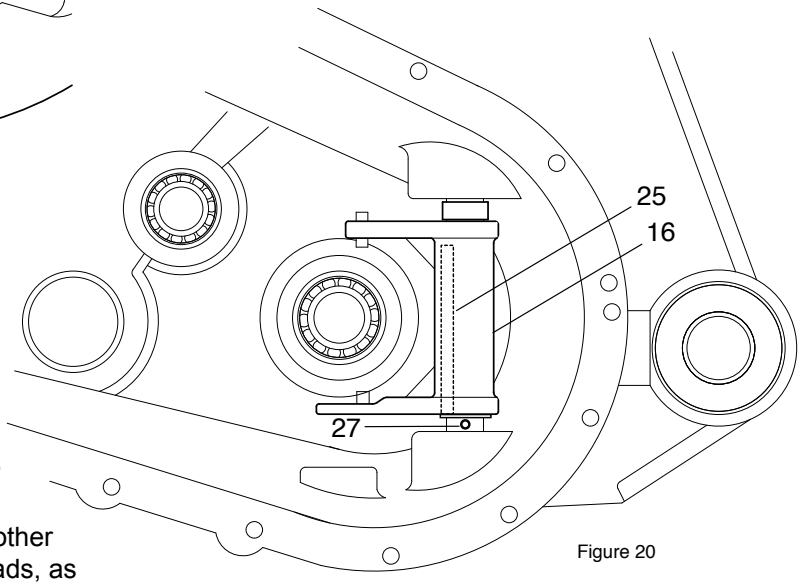

Figure 20

20

Apply a trickle of adhesive sealer #F4123761P to the base of the bolt (item 28). Insert the flat washer (item 29) on the bolt then apply another trickle of adhesive sealer to the top of the threads, as shown in figure 19-a. Screw the bolt inside the housing as shown in figure 19.

21

Make sure the direction arm (item 21) can rotate freely. Insert the shims (item 31) between the end of the shaft and the washer #F4120873 (item 22).

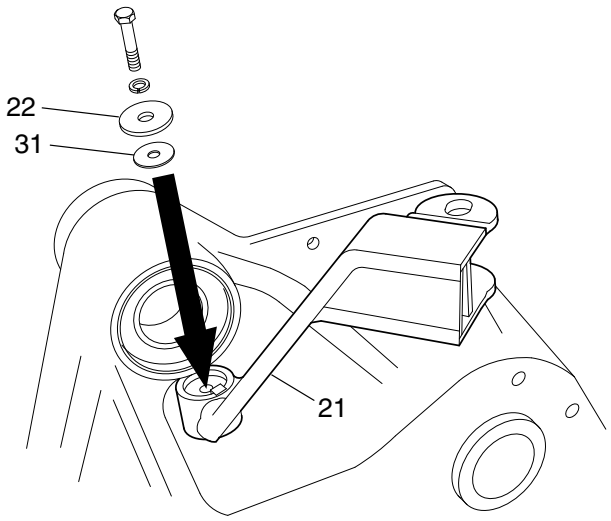

Figure 21

22

Insert the two shafts #F4121411 (item 32) inside the housing and tighten shafts in place with two nuts #F4121412 (item 33) as shown in figures 22 and 23.

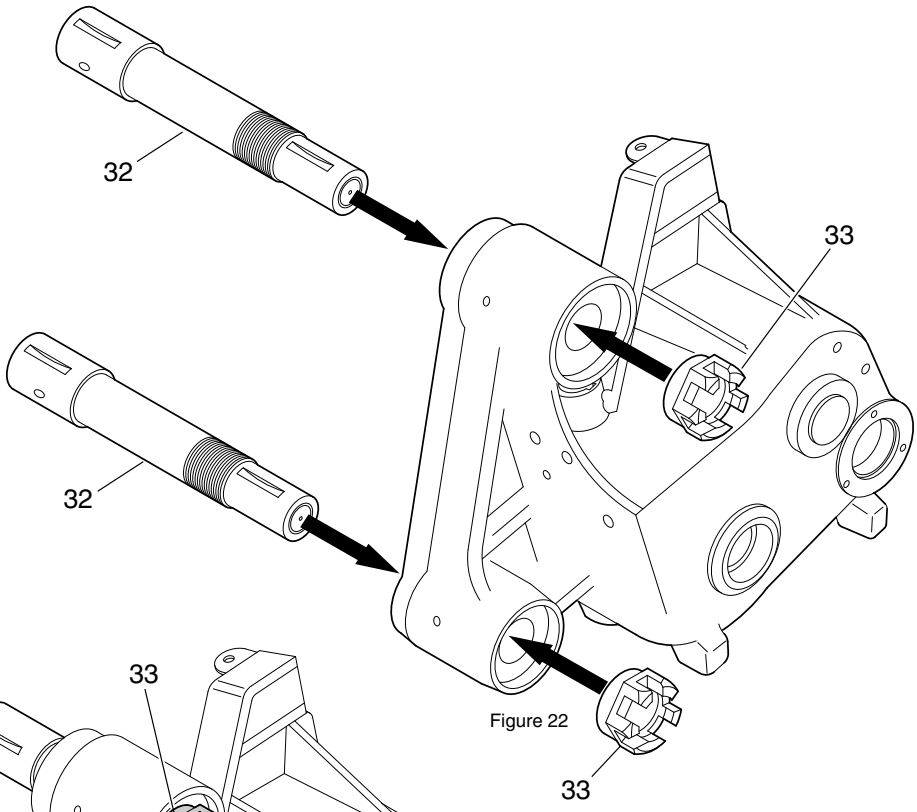

Figure 22

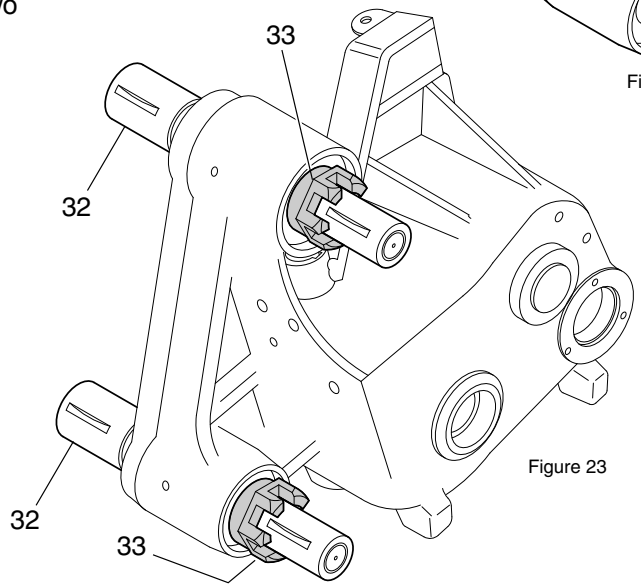

Figure 23

23

Insert a rod (item 34) in a hole located on each of the two shafts. Use this rod as a lever as well as a wrench (item 35) to tighten the nuts (see figure 24). Loosen slightly in order to align the holes on the shaft and the nut. The shaft is installed correctly when it can be turned with only a slight resistance.

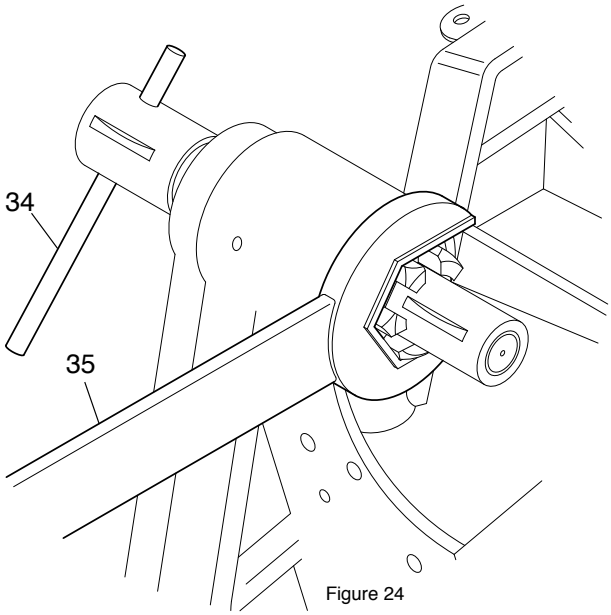

Figure 24

24

Insert a spring pin #N10P142 (item 36) in each of the shafts, as shown in figure 25.

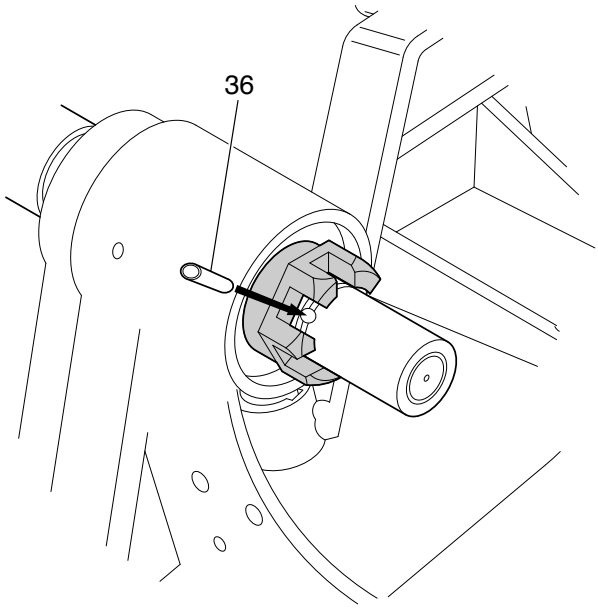

Figure 25

25

Assemble the chain sprocket as shown in figure 26. The assembly includes a jaw bushing #T2914403 (item 37), a spacer ring #T2914036 (item 38) and a chain sprocket #F4117037W (item 39).

26

Before assembling the chain sprocket, check if the key #N10P24 (item 40), which will be used later, can be easily inserted inside the spacer ring as shown in figure 26-a. If this is not the case, file the inside of the key way on the ring (item 38).

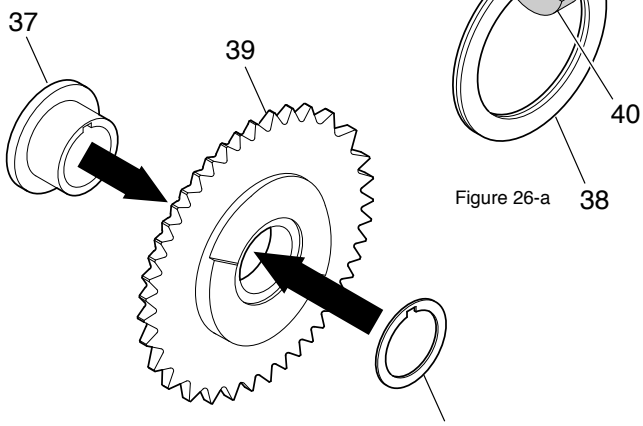

Figure 26

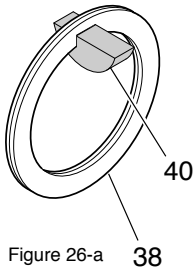

Figure 26-a

27

Slide the clutch assembly #F4117039 (item 41) on the grooved shaft #F4122377 (item 42). Make sure the direction wheel slides freely on the shaft (see figure 27).

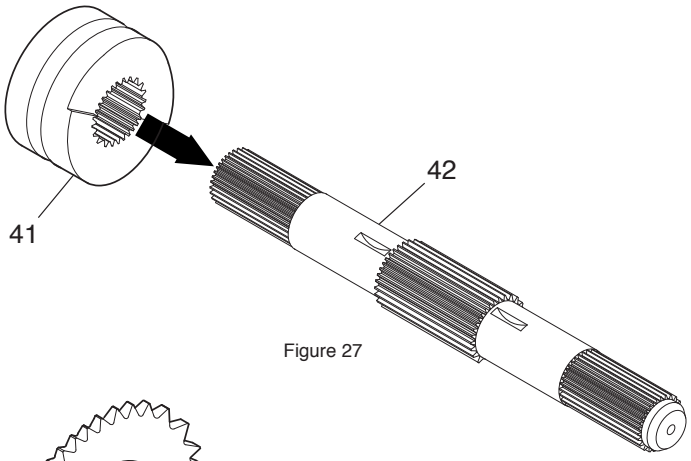

Figure 27

28

Slide the chain sprocket (item 39), assembled in step 26, on the grooved shaft (item 42) (see figure 28).

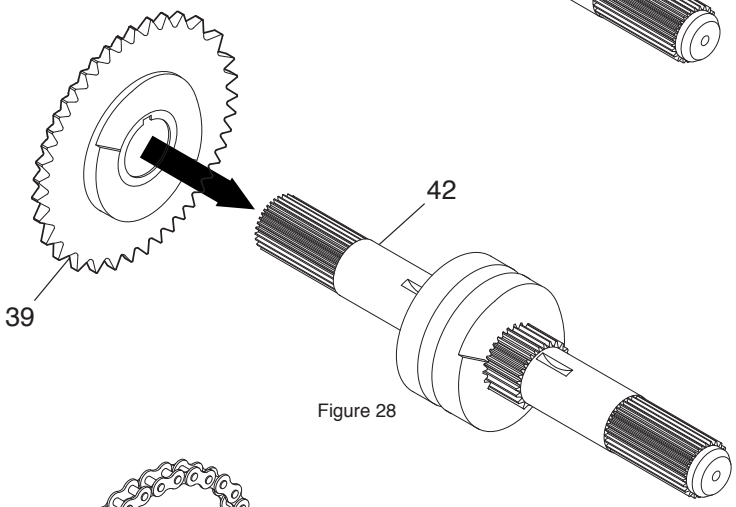

Figure 28

29

Assemble the chain #F4117232 (item 43) and install it on the chain sprocket (item 39) as shown in figures 29 and 30.

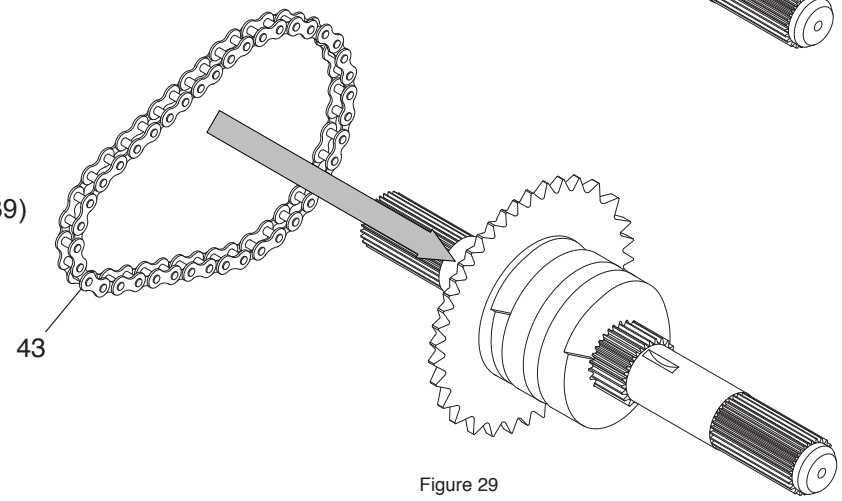

Figure 29

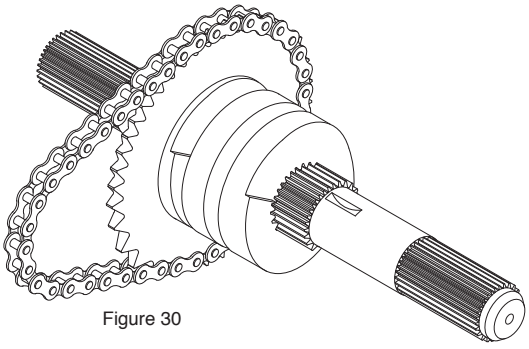

Figure 30

30

Slide the shaft assembly (item 44) inside the housing, as shown in figure 31. It is possible to use a rubber hammer in order to tap the shaft inside the bearing. DO NOT push completely inside.

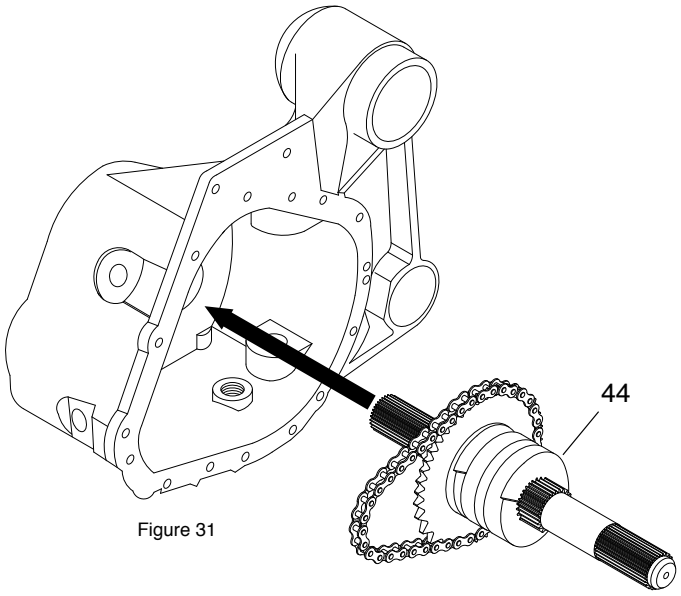

Figure 31

31

Bring the clutch jaw slightly forward (item 41), install the half-moon key (item 40) then gently push back the clutch jaw making sure the key is aligned with the spacer ring (item 38) and the jaw bushing (item 37 in step 26).

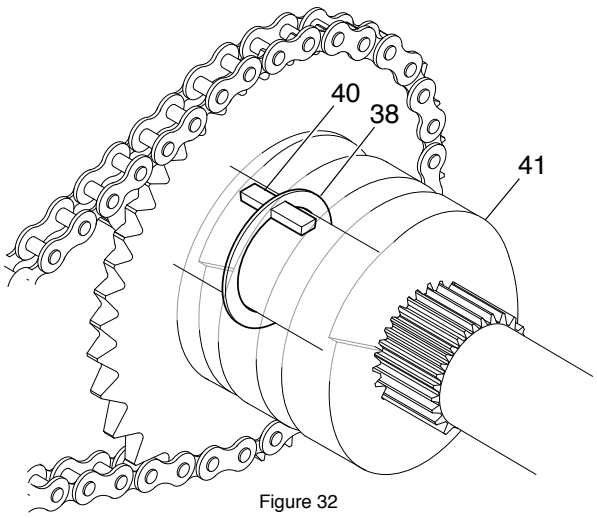

Figure 32

32

Install the gear assembly (item 45) inside the housing by sliding the end of the shaft in the appropriate hole. Use a rubber hammer to correctly force the gear assembly shaft inside the hole.

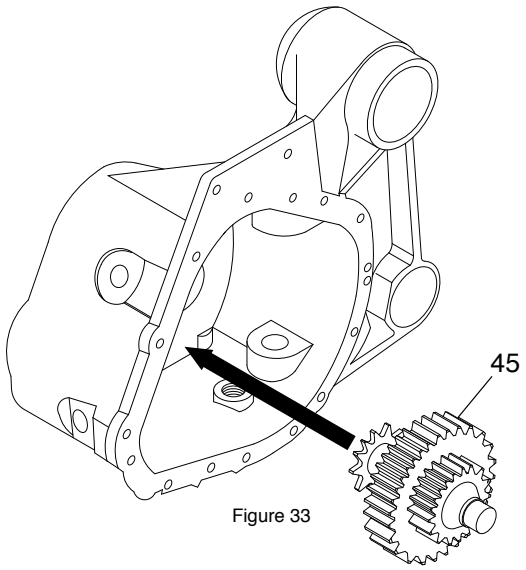

Figure 33

33

Make sure the two shafts are well inside the bearings and the chain well installed between the two chain sprockets as shown in figure 34.

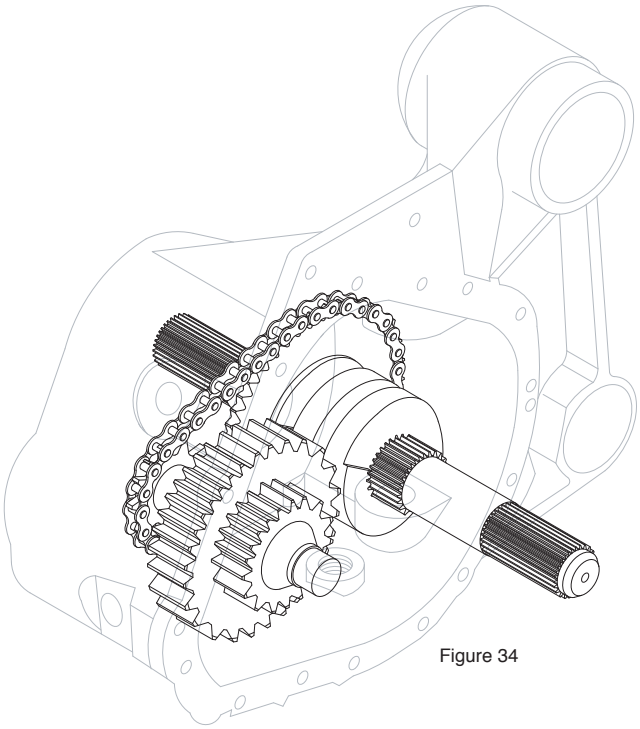

Figure 34

34

Install a key #N10P24 (item 46) in the key way of the direction shaft. Then, slide a spacer ring #T2914036 (item 47) over the key as shown in figures 35 and 36.

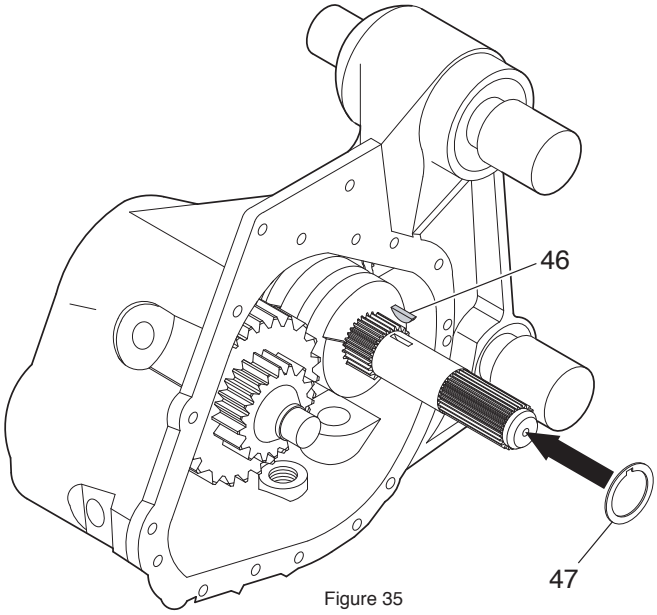

Figure 35

35

Install a jaw bushing #T2914403 (item 48) inside gear #F4117038W (item 49) as shown in figure 36-a. Then, slide the gear (item 49) on the grooved shaft as shown in figure 36.

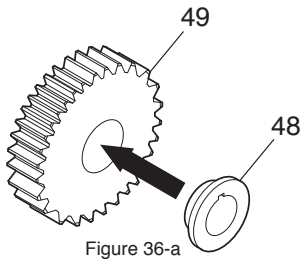

Figure 36-a

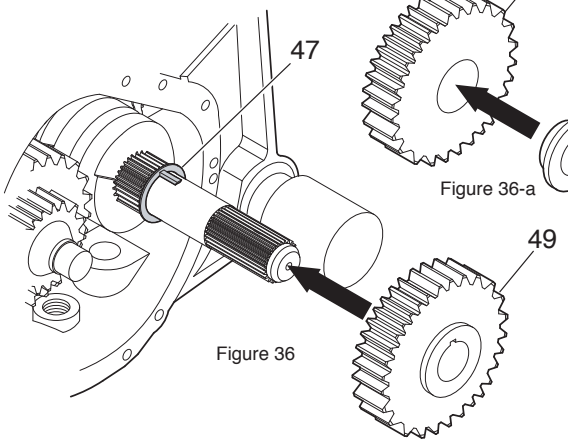

Figure 36

36

Make sure the gears are flush and well engaged into each other, as shown in figure 37.

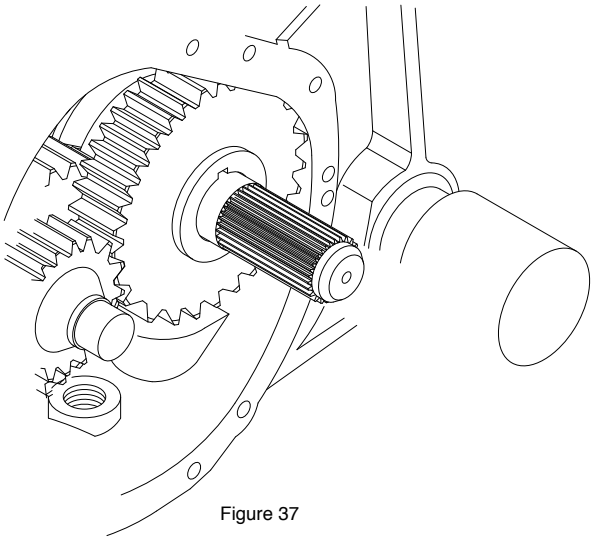

Figure 37

37

Apply a trickle of Lock-tite to the base of each of the bearings (#T2915217P item 52) and (#T2915218P item 53) then insert the two bearings as shown in figure 38.

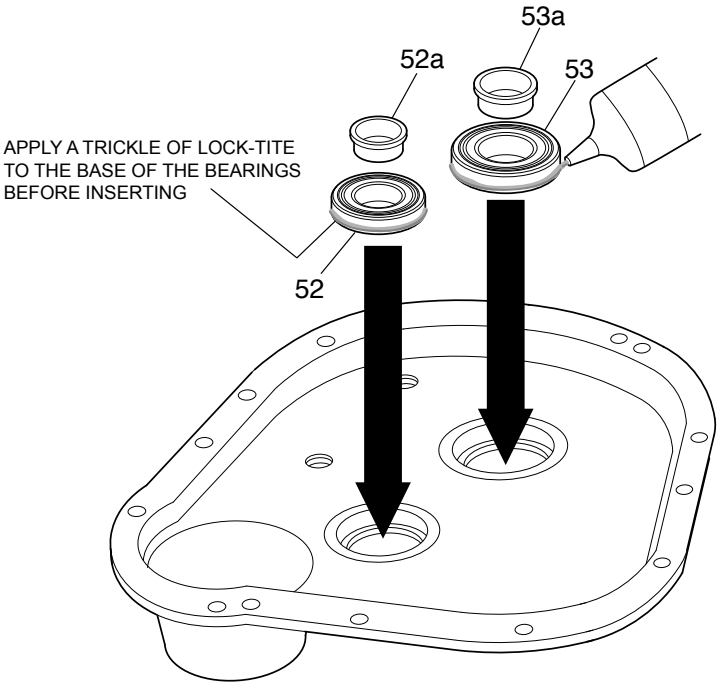

Figure 38

38

Use a tool whose diameter fits the outside diameter of the bearings and a hammer to tap the bearings inside their seat as shown in figure 39.

39

Insert the inside rings (items 52a and 53a) inside the bearings as shown in figure 38.

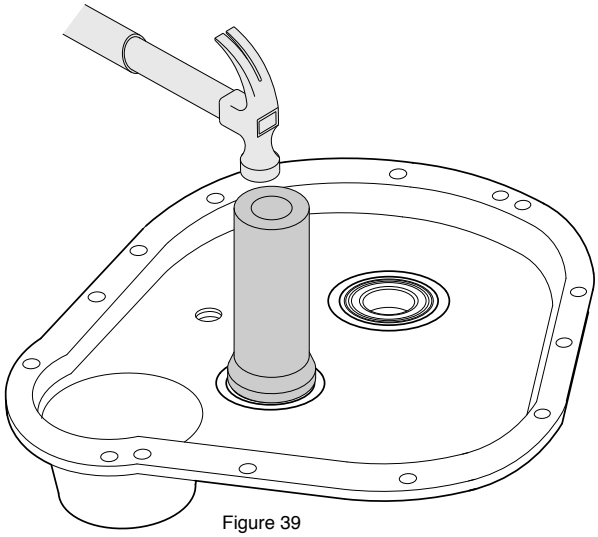

Figure 39

40

Install the two spring pins #T2915222P (item 54) as shown in figure 40.

41

Apply a trickle of adhesive sealer #F4123761P around the edge of the housing where the housing cover will be installed, as shown in figure 40.

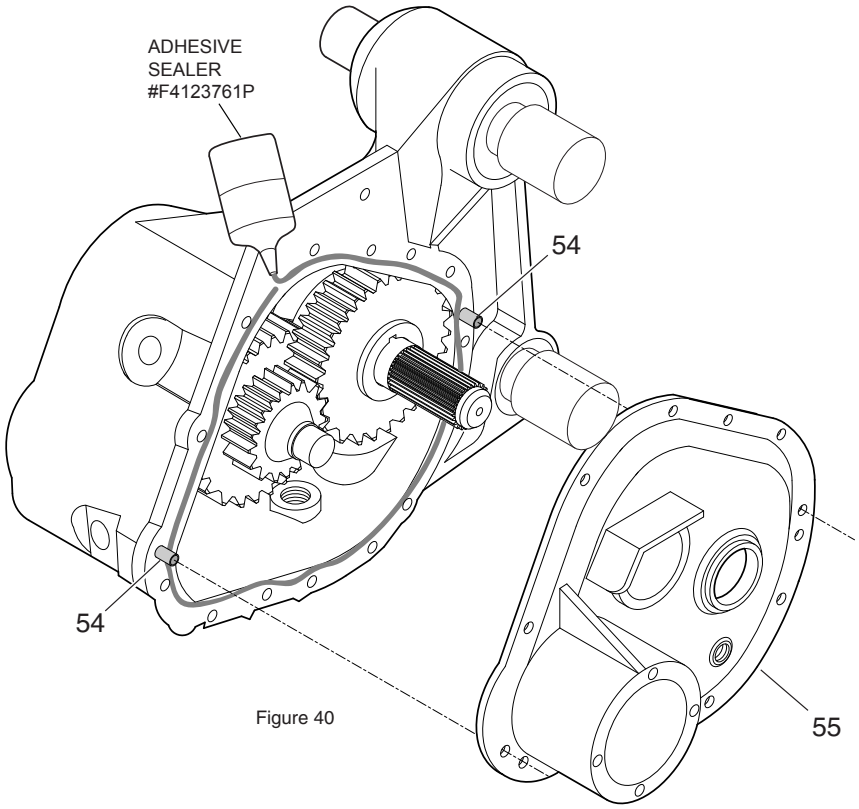

Figure 40

42

Install the housing cover (item 55) on the housing as shown in figure 40. Note that the two pins must fit inside the appropriate holes on the housing cover. Secure the housing cover using nine bolts (item 56) and nine lock washers as shown in figure 41.
NOTE: It may be necessary to use a rubber hammer in order to insure that the housing cover slides parallel to the housing.

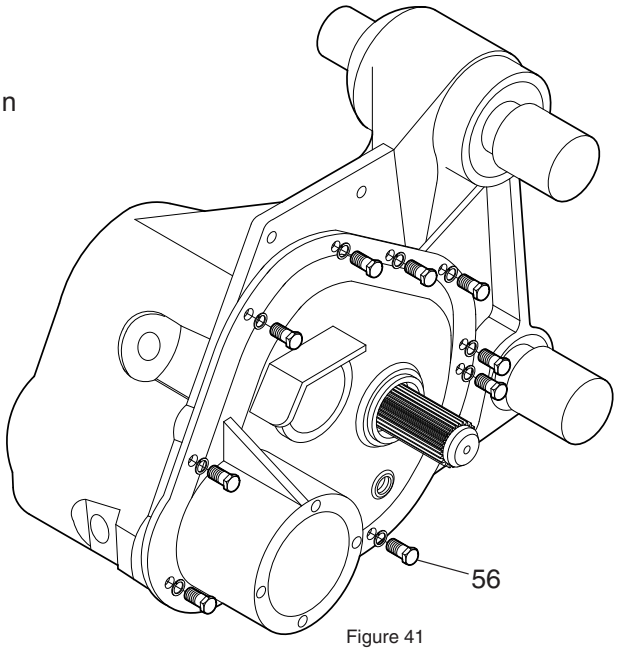

Figure 41

43

Apply a trickle of Lock-tite to the shaft #F4121052 (item 57) just ahead of where the bearing will sit.

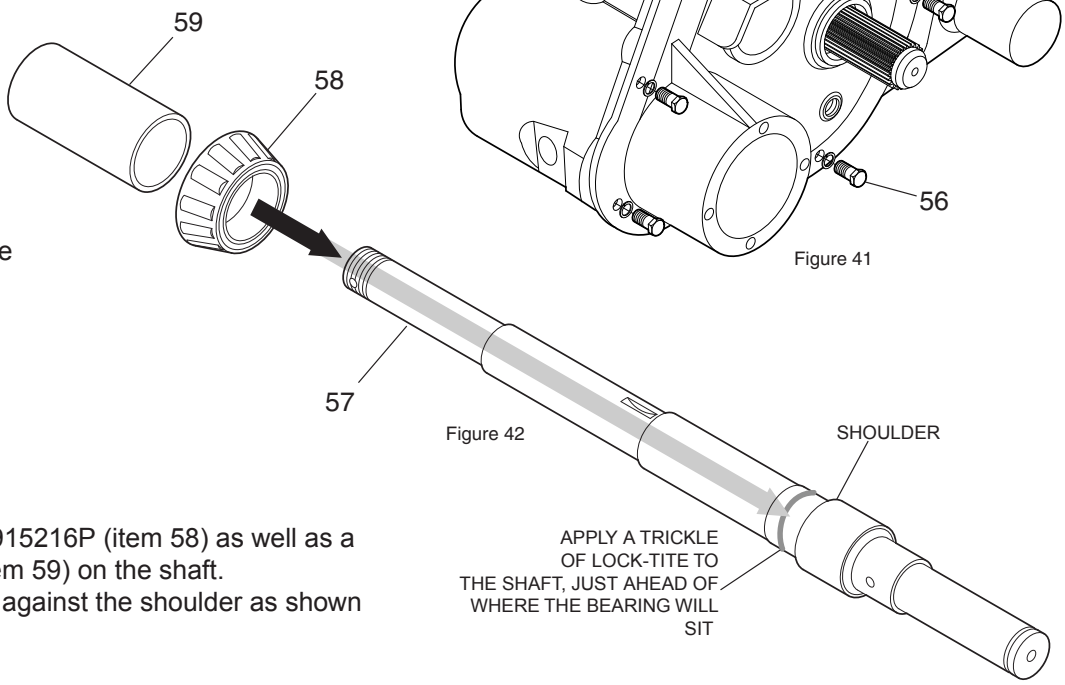

Figure 42

44

Slide the bearing #T2915216P (item 58) as well as a spacer #T2914594 (item 59) on the shaft.
The bearing must rest against the shoulder as shown in figures 42 and 43.

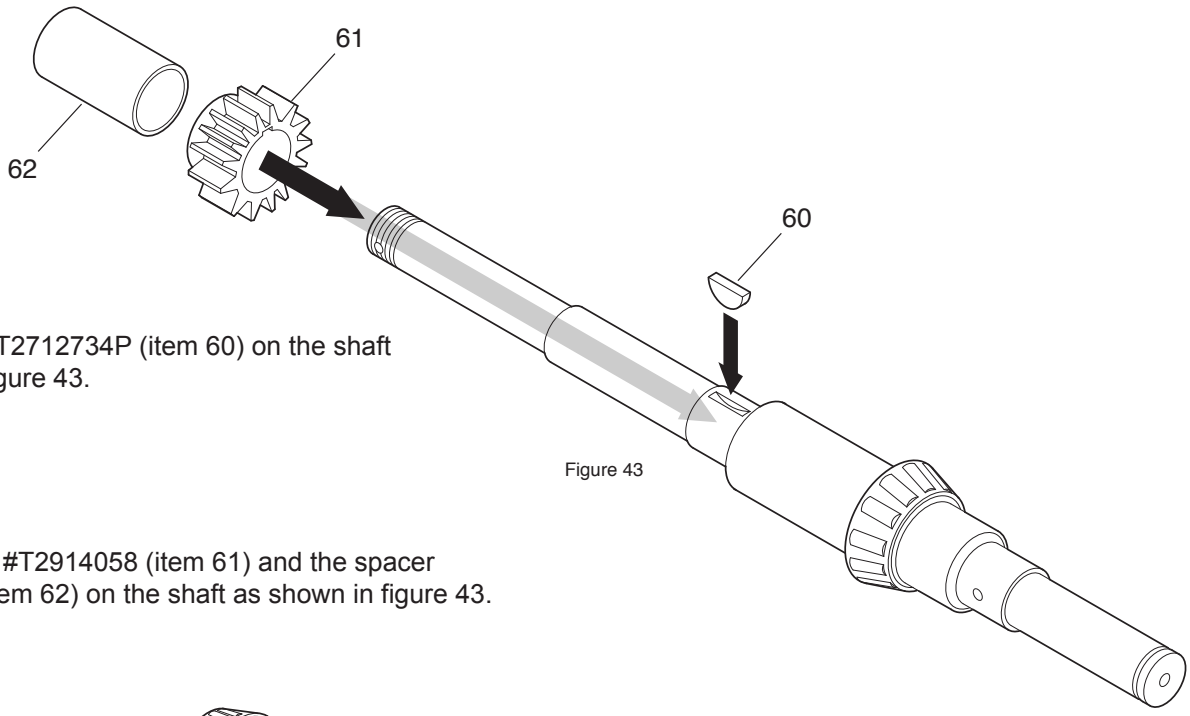

Figure 43

45

Install a key #T2712734P (item 60) on the shaft as shown in figure 43.

46

Slide the gear #T2914058 (item 61) and the spacer #T2914156 (item 62) on the shaft as shown in figure 43.

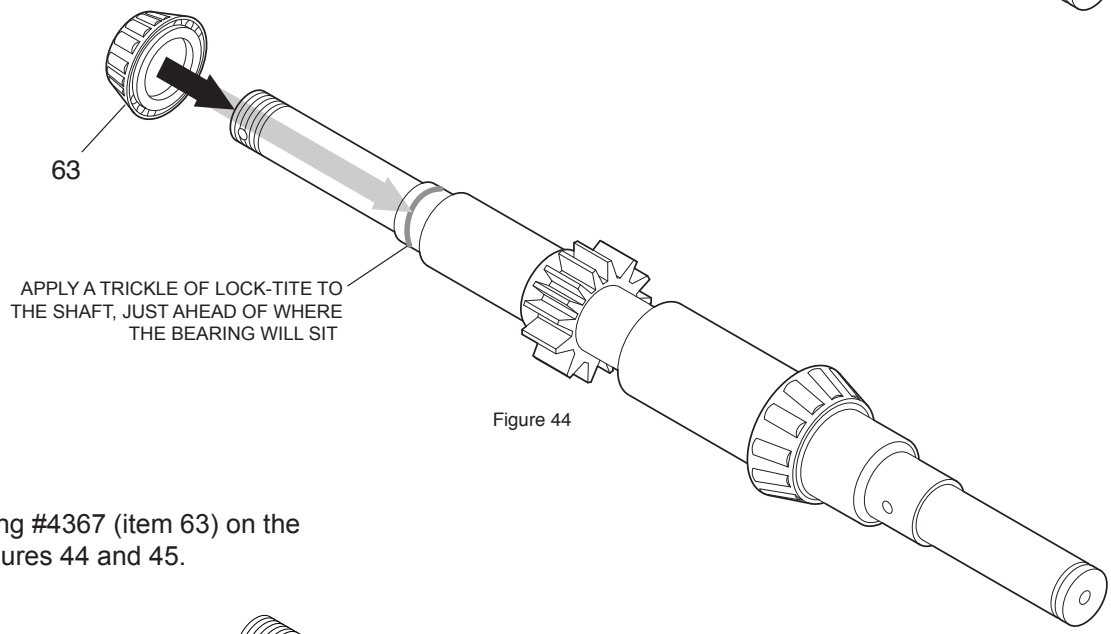

Figure 44

47

Slide the cone bearing #4367 (item 63) on the shaft as shown in figures 44 and 45.

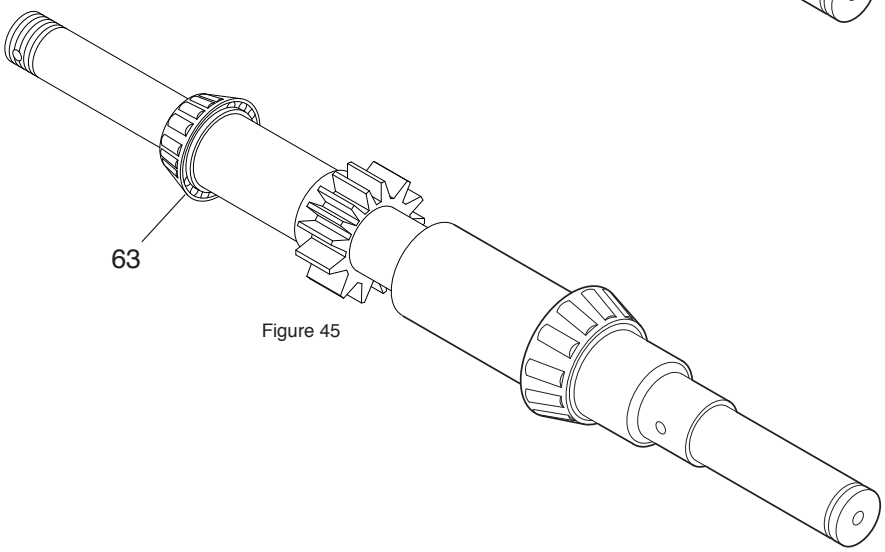

Figure 45

48

Insert the shaft inside the housing as shown in figure 46.

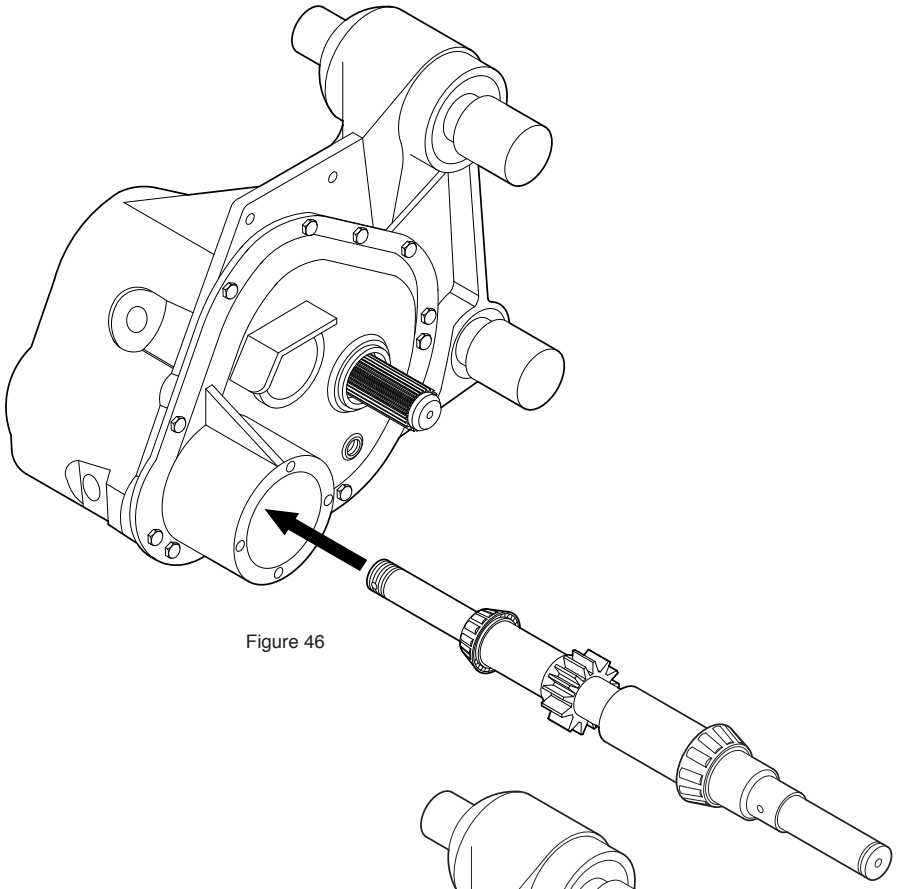

Figure 46

49

Insert the bushing ring (item 64) (included with the bearing #T2915216P) (item 58) in figure 42) between the bearing and the housing as shown in figure 47. The thinner side of the bushing must face the housing. The thicker side must face out.

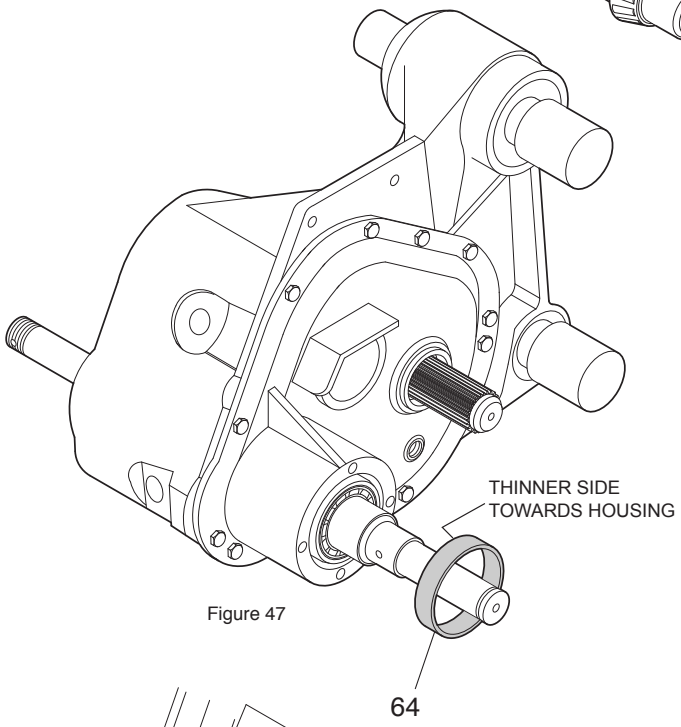

Figure 47

50

Using a flat tip punch and a hammer to tap the bushing completely inside the housing The bushing must be flush with the edge of the housing (see figure 48).

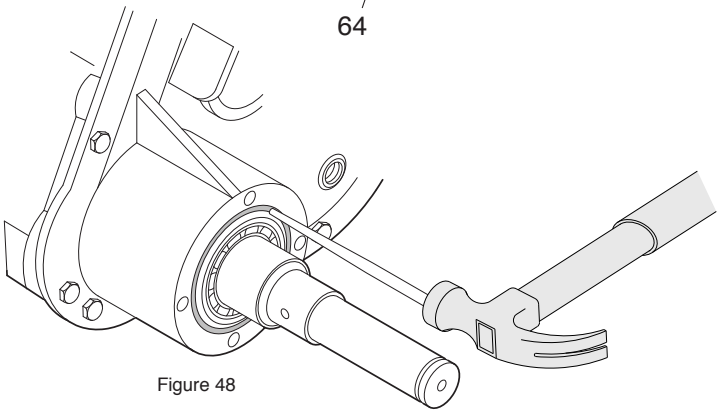

Figure 48

51

Apply a trickle of adhesive sealer #F4123761P to the inside of the lid #T2914059 (item 65). The trickle of adhesive sealer must be applied towards the inside of the four holes.

52

Secure lid #T2914059 (item 65) with four bolts (item 66) and four lock washers.

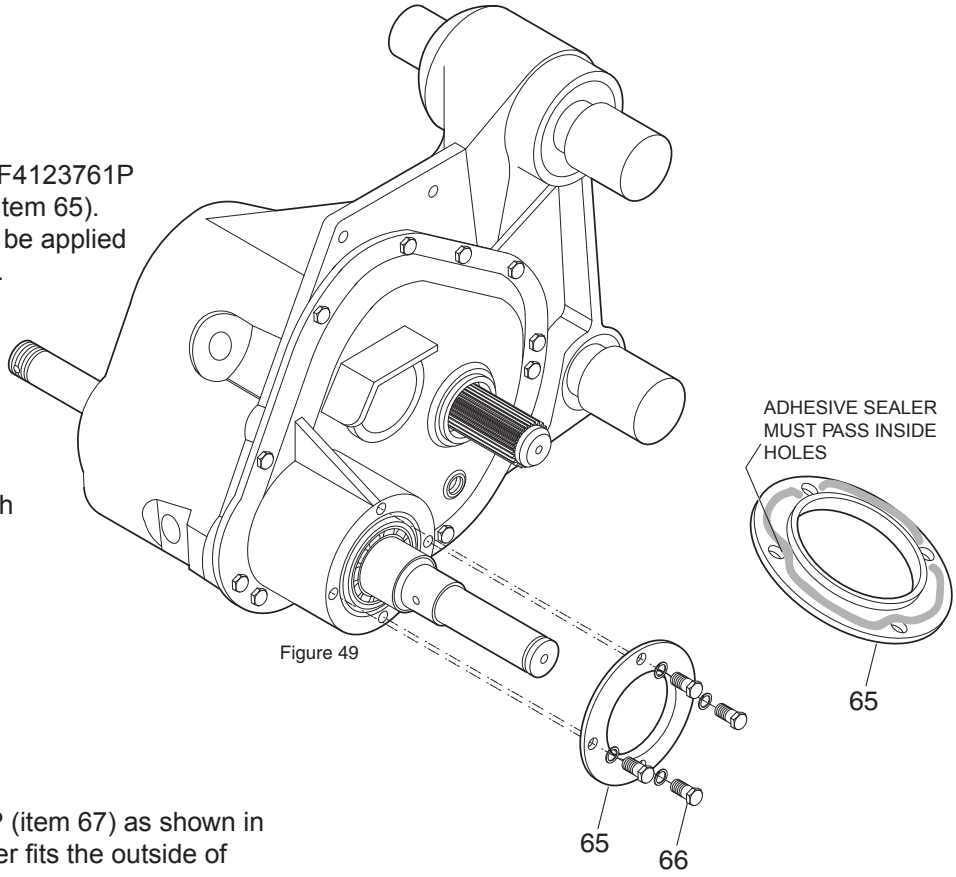

Figure 49

53

Install the sealing ring #T2915221P (item 67) as shown in figure 50. Use a tool whose diameter fits the outside of the sealing ring (item 67) to tap it in.

54

Install a sealing ring #T2915219P (item 68) on both sides of the housing, as shown in figure 51. Use a tool whose diameter fits the outside of the sealing ring (item 68) to tap it in.

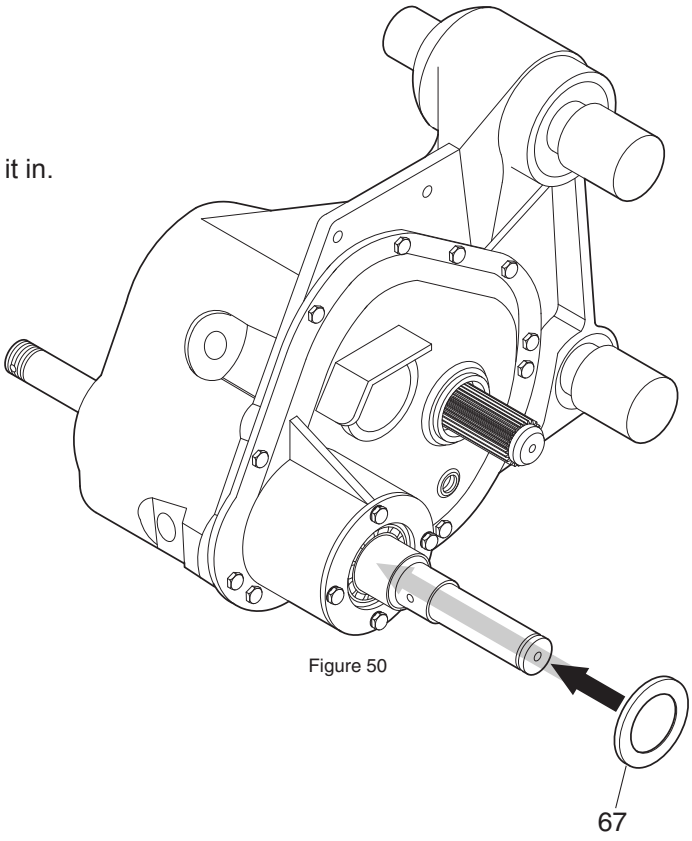

Figure 50

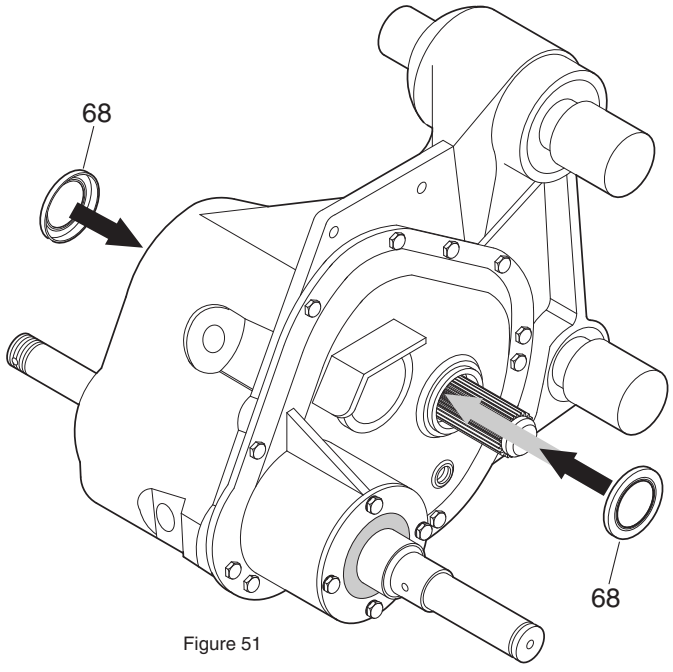

Figure 51

55

Slide the inner ring of the sheave bushing #F4121054P (item 69) on the shaft as shown in figure 52.
IMPORTANT: The unstamped end of the inner ring (item 69) (with fillet) should be assembled against the shaft as shown in figure 52-a.

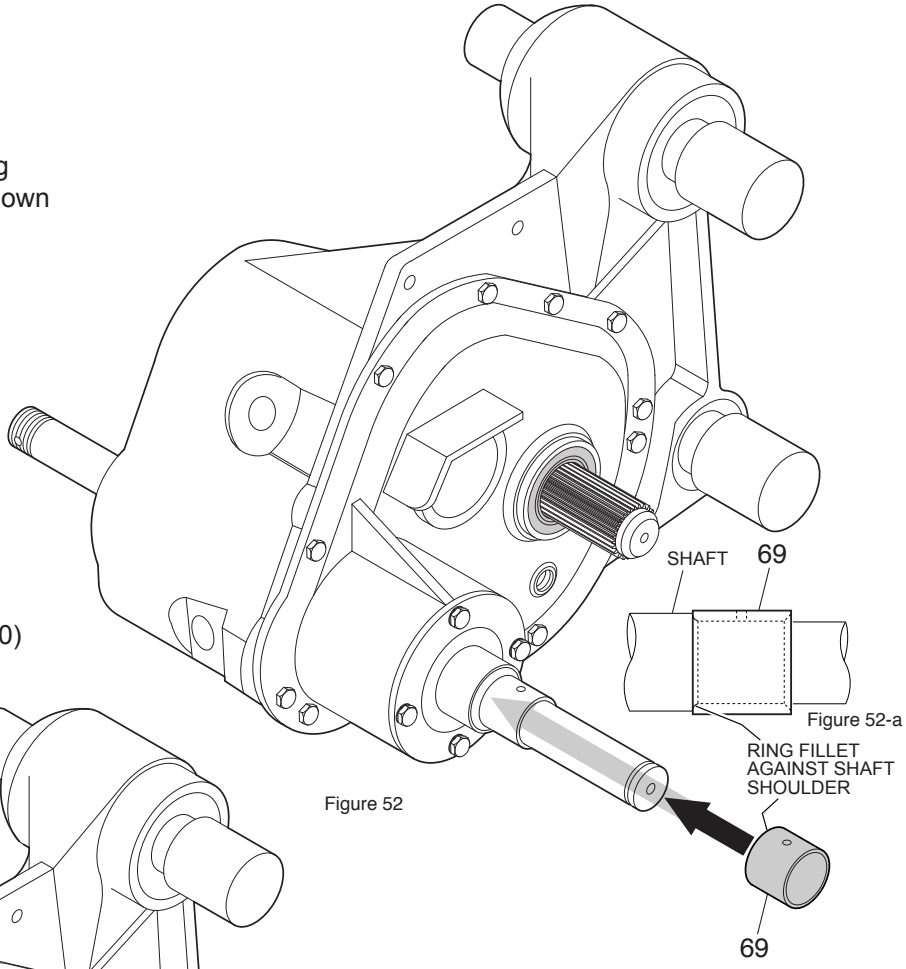

Figure 52

Figure 52-a

56

Install the snap ring #F4122424P (item 70) on the shaft as shown in figure 53.

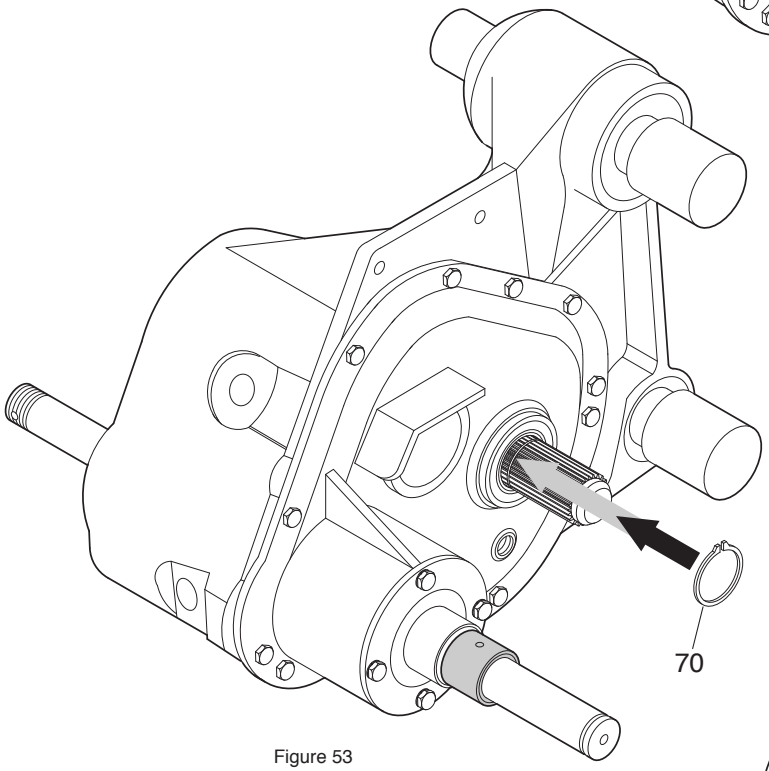

Figure 53

57

Install a key #T2712734P (item 71) on each of the shafts as shown in figure 54.

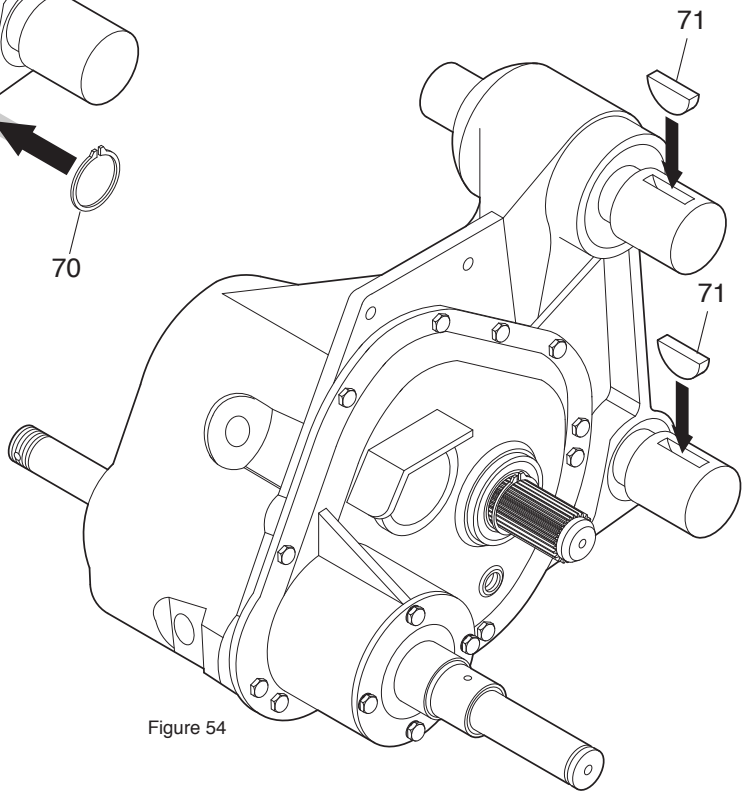

Figure 54

58

Apply anti-seize to the grooved shaft as shown in figure 55.

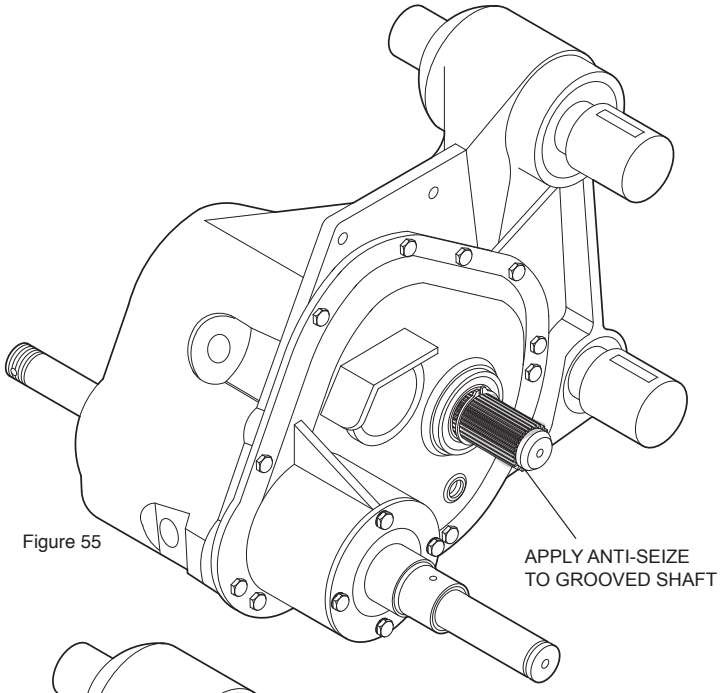

Figure 55

59

Install the three chain sprockets #F4121415 (items 72), #F4121414 (item 73) and #F4122375W - 3/8" long cut (item 74) on the appropriate shaft, as shown in figure 56.

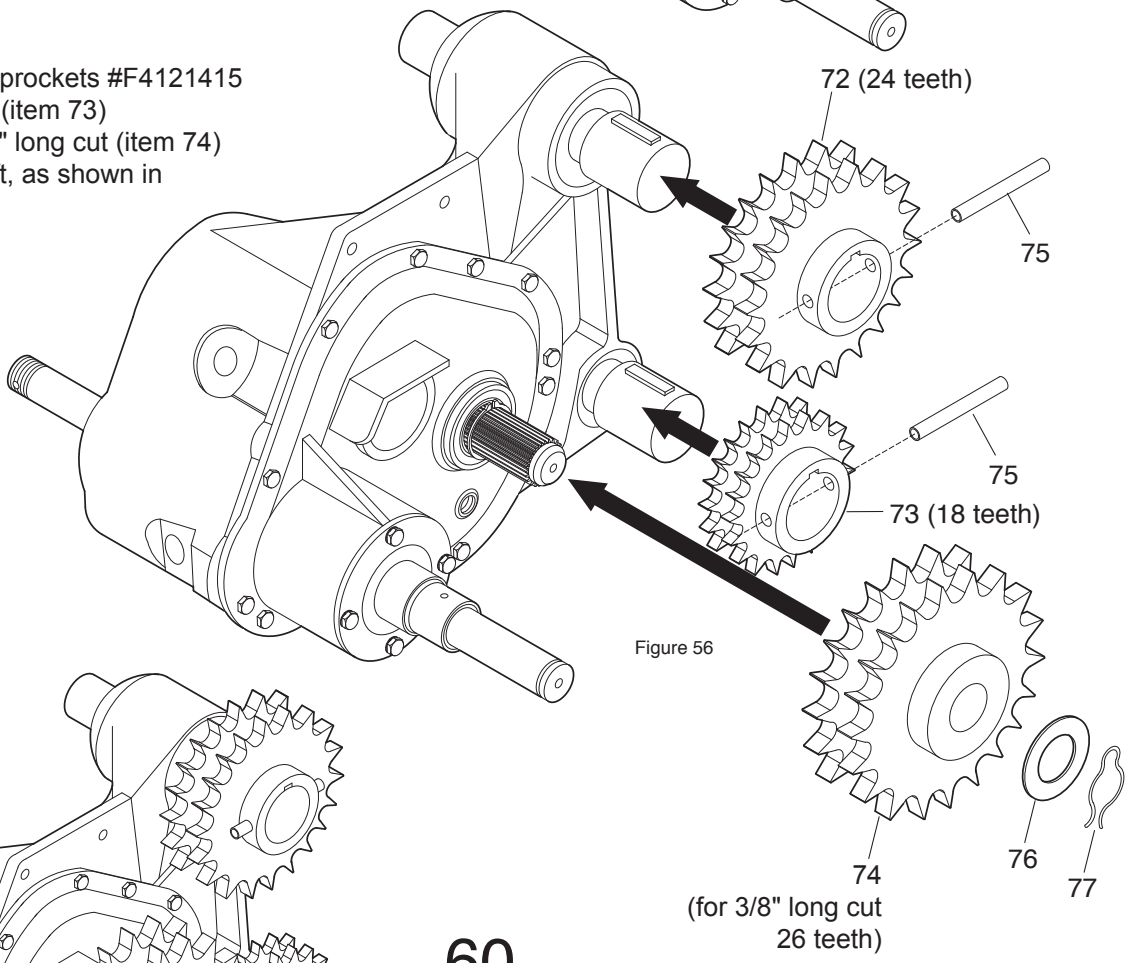

Figure 56

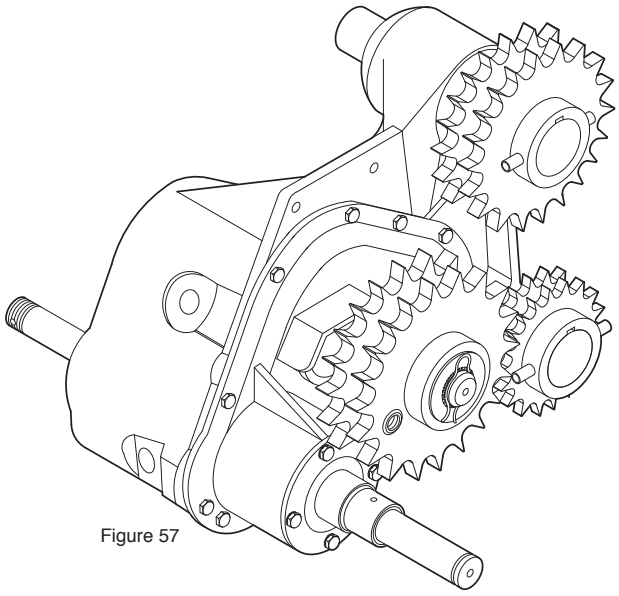

Figure 57

60

Secure the chain sprockets (items 72 and 73) with spring pins #GR516X312 (items 75). Secure the chain sprocket (item 74) using a flat washer #F4122426 (item 76) and a pin #F4122425P (item 77). Figures 56 and 57 show how the three chain sprockets must be installed. IMPORTANT: The three chain sprockets must be aligned together.

61

Install the needle roller bearing #F4121055P (item 78) inside the sheave #F4121053 (item 80). Then bolt part #F4121066P (item 79) to the sheave (item 80) using six bolts #BH516X114-8Z (item 81) and six lock washers #RA516Z (item 81a).

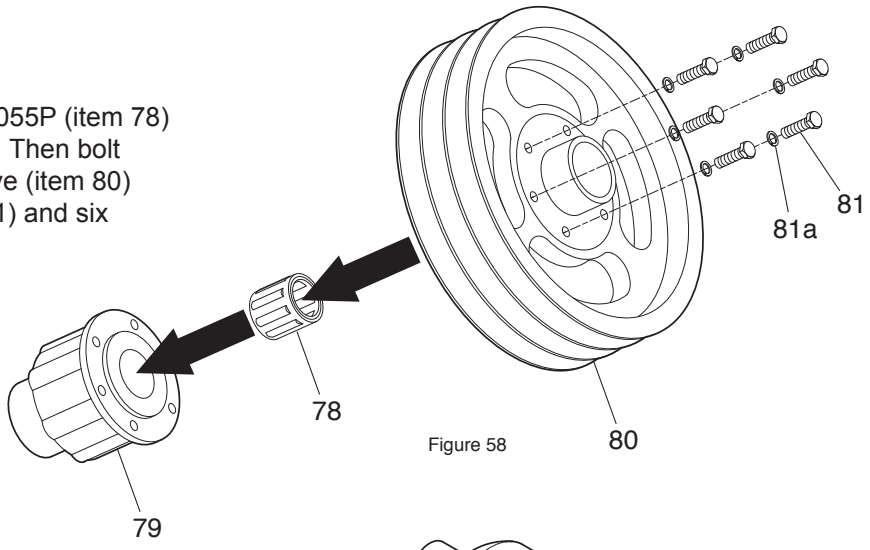

Figure 58

62

Slide the sheave assembly (item 82) on the shaft as shown in figure 59.

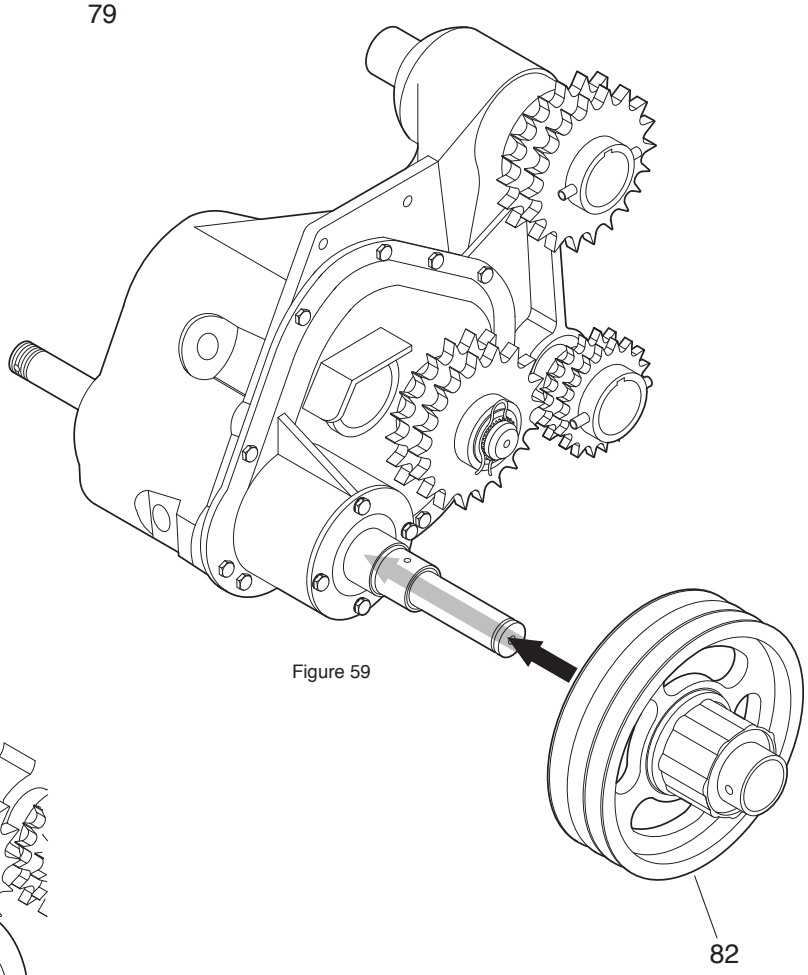

Figure 59

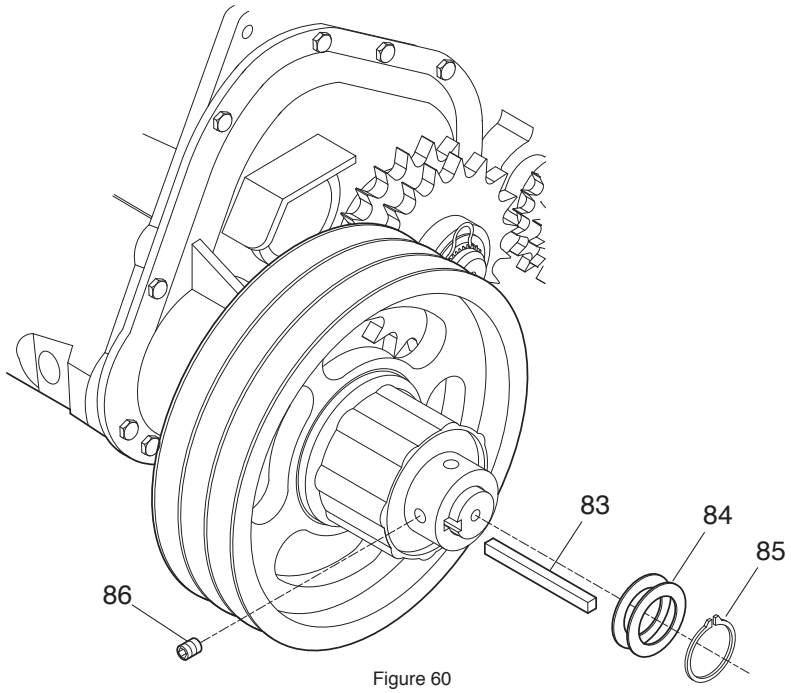

Figure 60

63

Lock the sheave assembly to the shaft with a key #T2914657 (item 83) (push in completely), two flat washers #T18P73 (item 84) and a snap ring #F4121058P (item 85). Lock the key in place using a mechanical screw #T18P36 (item 86). See figures 60 and 61.

64

Figure 61 shows the sheave assembly held to the shaft by two flat washers, a snap ring and a mechanical screw.

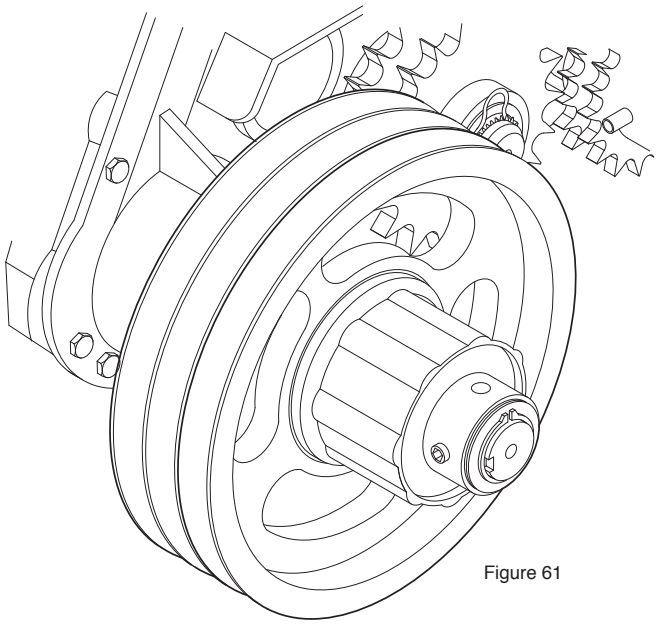

Figure 61

65

Slide the chain sprocket #F4122118W (item 87) on the shaft as shown in figure 60. Lock the sprocket in place using a bolt #BH516X312Z (item 88) and a lock nut #EP516Z (item 89). See figure 62.

66

Install the lid #T2914155 (item 90). To do so, you must install the 0.008" shim #T2914085 (items 91) and the 0.002" shim #T2914034 (item 91a) between the housing and the lid. These shims allow the adjustment of the tapered roller bearings. The adjustment of the tapered roller bearings is done using the shims (items 91 and 91a).
The shaft must turn freely without any loose in the the bearings. Before carrying out the final installation of the lid (item 82), apply a trickle of adhesive sealer #F4123761P as shown in figure 63-a.

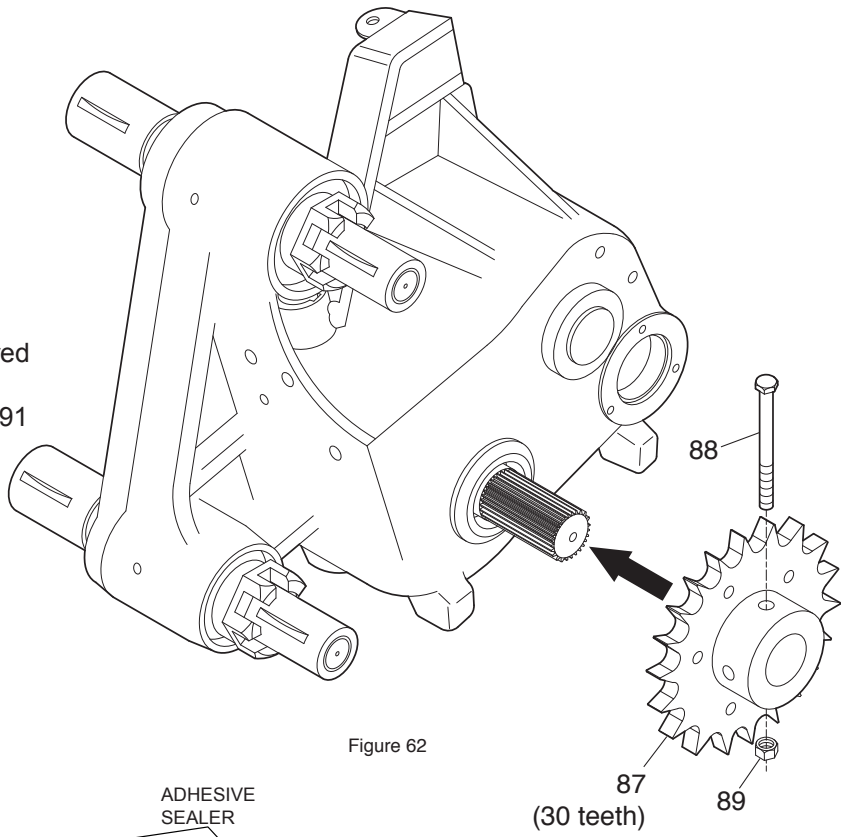

Figure 62

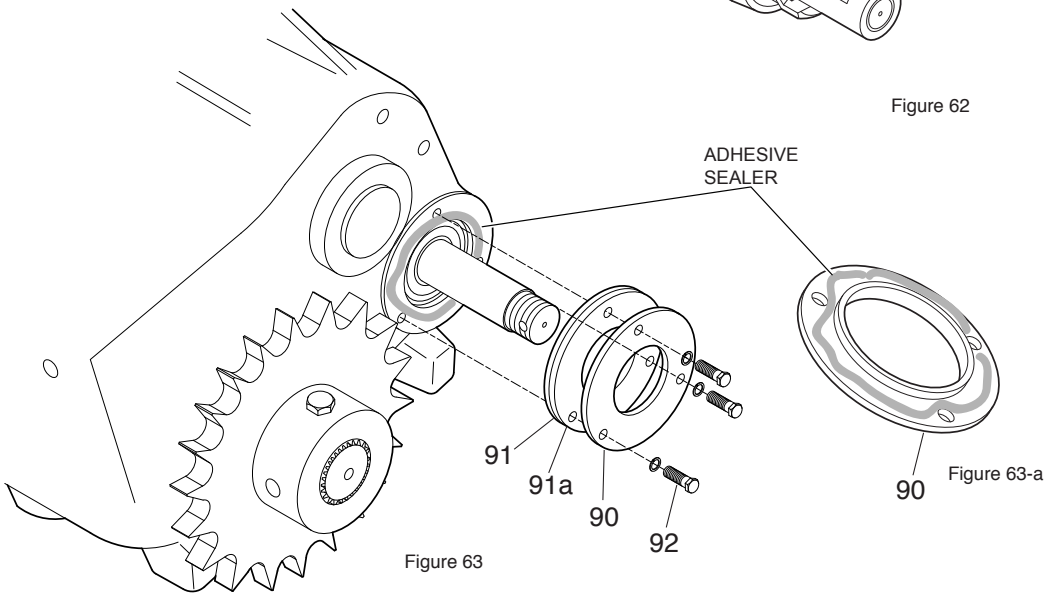

Figure 63

Figure 63-a

67

Insert the rubber seal #F4122488P (item 93) inside the spacer #T2914071 (item 94) as shown in figure 64. Install the rubber seal in a groove inside the spacer (item 94).

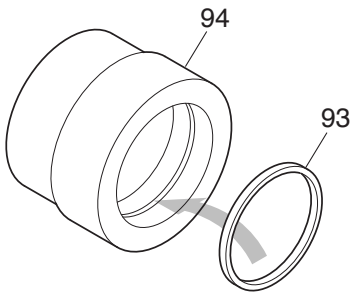

Figure 64

68

Apply a trickle of adhesive sealer on the seal (item 95). Then, slide the seal #T2915220P (item 95) inside the lid (item 90) using a tool whose diameter fits the outside diameter of the seal.

69

Slide the spacer (item 94) on the shaft as shown in figure 65. Rotate the spacer (item 94) as it is slid on the shaft in order to avoid the rubber seal to be damaged. (item 93 in figure 64).

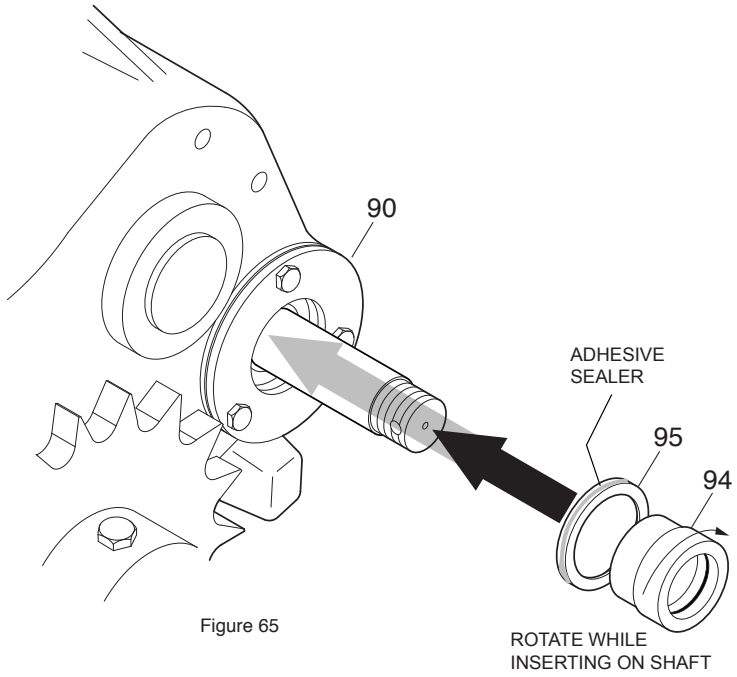

Figure 65

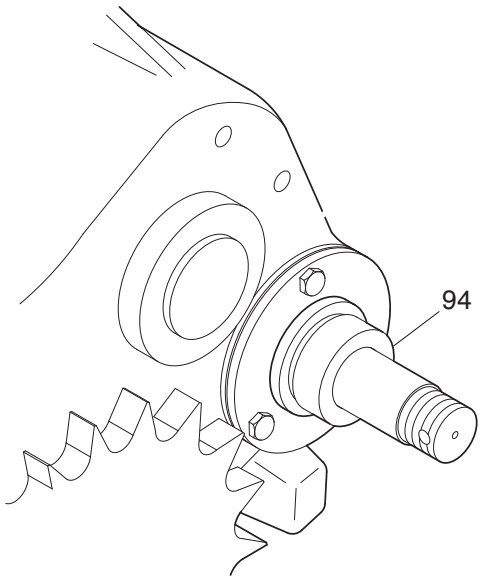

Figure 66

70

Slide the double chain sprocket (item 96) on the shaft as shown in figure 67. Then, lock the chain sprocket to the shaft using the nut #T2813525P (item 97). Apply Loctite #262 (or the equivalent) on the rod threads before installing nut.

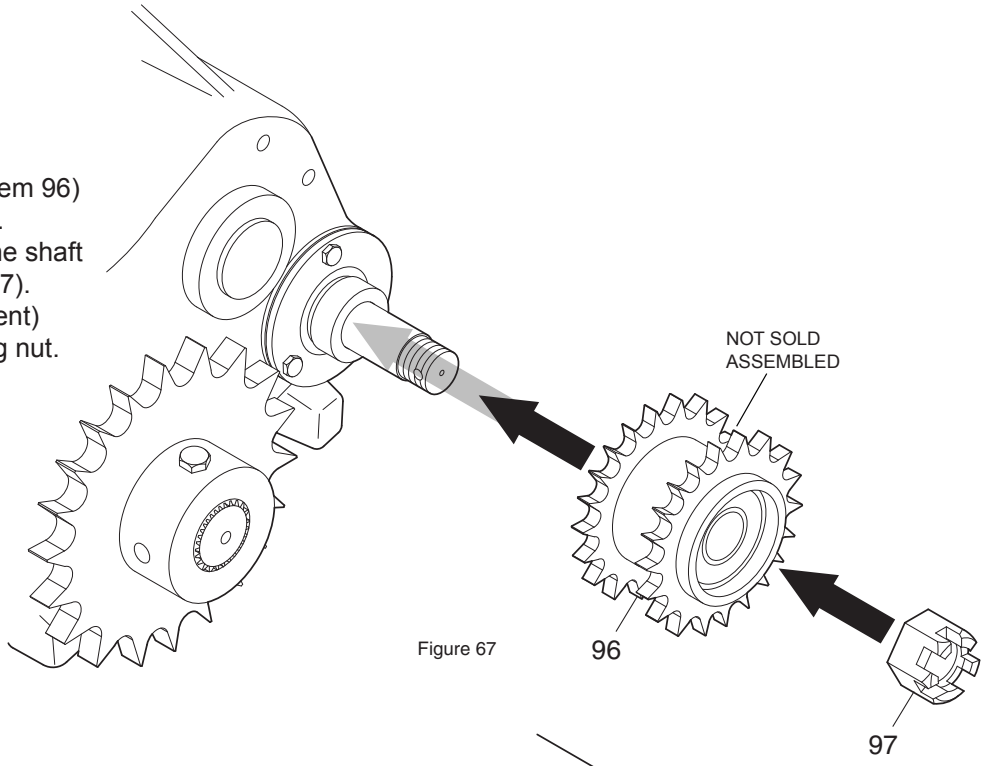

Figure 67

71

Lock the nut (item 97) with a bolt #BH516X234Z (item 98) and a stop nut #EP516Z (item 99) as shown in figure 68. Cut the part of the bolt that is exceeding.

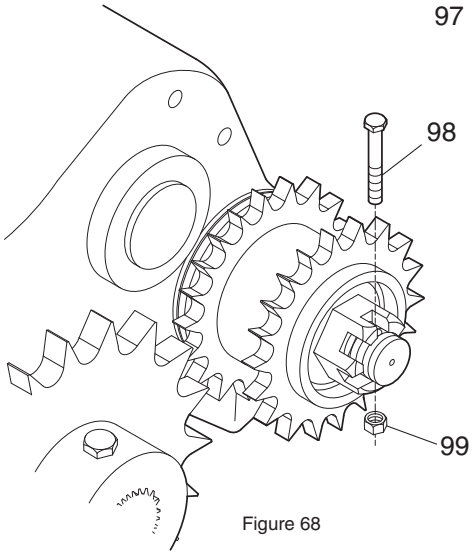

Figure 68

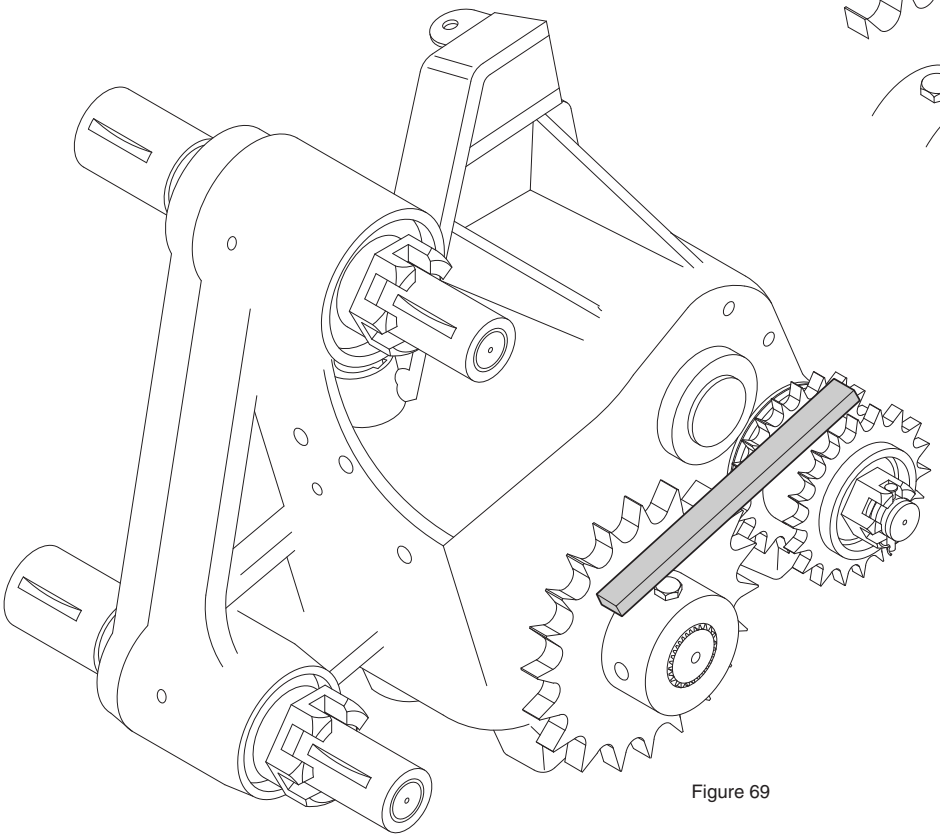

Figure 69

72

Check the alignment of the chain sprockets using a straight metal bar as shown in figure 69. If the chain sprockets are not well aligned together, add a washer behind the double chain sprocket.